BOSCH
Innovación para tu vida

Iturria
DISTRIBUCION PROFESIONAL

# Filtros

## Línea livianos

Filtros de aceite
Filtros de aire
Filtros de combustible
Filtros diesel
Filtros de cabina

# Índice

**Parte B**

**B1** Tabla de aplicaciones

**B2** Cross

**B3** Dimensional

**B4** Tabla de conversión: Otras marcas - Bosch

| MARCA | VEHÍCULO | MOTOR | FECHA | SC | ACEITE | SC | AIRE | SC | COMBUSTIBLE | SC | HABITÁCULO |
|---|---|---|---|---|---|---|---|---|---|---|---|
| ALFA ROMEO | | | | | | | | | | | |
| ALFA ROMEO | 33 1.7 I.E. | | 01.90 => 10.94 | OB0017 | 0986B00017 | | | | | | |
| ALFA ROMEO | 145 1.8i T.S.16v | | 02.99 => | OB0013 | 0986B00013 | | | | | | |
| ALFA ROMEO | 145 1.8i T.S.16v | | 11.96 => 11.99 | OB0013 | 0986B00013 | | | GB0018 | 0986BF0018 | | |
| ALFA ROMEO | 145 1.9 JTD | | | OB0013 | 0986B00013 | | | N4293 | 1457434293 | | |
| ALFA ROMEO | 145 1.9 TD | AR33601 | 10.94 => 01.01 | OB0030 | 0986B00030 | AB2303 | 0986B02303 | DB0309 | 0986BF0309 | | |
| ALFA ROMEO | 145 2.0 i.e. 16V T.S. | | | OB0013 | 0986B00013 | | | GB0018 | 0986BF0018 | | |
| ALFA ROMEO | 146 1.8i T.S. | | 02.99 => | OB0013 | 0986B00013 | | | | | | |
| ALFA ROMEO | 146 1.8i T.S. | | 11.96 => 11.99 | OB0013 | 0986B00013 | | | GB0018 | 0986BF0018 | | |
| ALFA ROMEO | 146 1.9 JTD | | | OB0013 | 0986B00013 | | | N4293 | 1457434293 | | |
| ALFA ROMEO | 146 1.9 TD | AR33601 | 10.94 => 01.01 | OB0030 | 0986B00030 | AB2303 | 0986B02303 | DB0309 | 0986BF0309 | | |
| ALFA ROMEO | 146 2.0 TD | | 01.95 => | OB0030 | 0986B00030 | AB2303 | 0986B02303 | DB0309 | 0986BF0309 | | |
| ALFA ROMEO | 146 2.0 ti -16V T.S. | | 10.95 => 11.00 | OB0013 | 0986B00013 | | | GB0018 | 0986BF0018 | | |
| ALFA ROMEO | 147 1.9 JTD | | 01.03 => | OB0013 | 0986B00013 | | | N4314 | 1457434314 | | |
| ALFA ROMEO | 147 2.0 TS | | 01.03 => | OB0013 | 0986B00013 | | | | | | |
| ALFA ROMEO | 155 2.0i 16V T.S. | | 05.96 => | OB0013 | 0986B00013 | | | F5087 | 0450905087 | | |
| ALFA ROMEO | 155 2.0i T.S. | | => 02.95 | OB0014 | 0986B00014 | S3253 | 1457433253 | | | | |
| ALFA ROMEO | 155 2.0i T.S.-16V | AR67204 | 03.95 => 04.96 | OB0013 | 0986B00013 | | | F5087 | 0450905087 | | |
| ALFA ROMEO | 155 2.0i Turbo | | | OB0014 | 0986B00014 | S3253 | 1457433253 | | | | |
| ALFA ROMEO | 155 2.5i - V6 | | 05.96 => 10.97 | OB0017 | 0986B00017 | S3253 | 1457433253 | F5087 | 0450905087 | | |
| ALFA ROMEO | 155 2.5i - V6 | AR67301 | 02.92 => 04.96 | OB0014 | 0986B00014 | S3253 | 1457433253 | | | | |
| ALFA ROMEO | 155 2.5i - V6 | AR67203 | 02.92 => 04.96 | OB0014 | 0986B00014 | AB2303 | 0986B02303 | | | | |
| ALFA ROMEO | 155 1.9 TD | AR67501 | 04.93 => 12.97 | OB0030 | 0986B00030 | AB2303 | 0986B02303 | DB0309 | 0986BF0309 | | |
| ALFA ROMEO | 156 2.0i 16V T.S. | | => 12.01 | OB0013 | 0986B00013 | | | F5087 | 0450905087 | | |
| ALFA ROMEO | 156 2.4 JTD | AR32501 | => 09.00 | P3354 | 0451103354 | | | N4293 | 1457434293 | | |
| ALFA ROMEO | 156 2.5i V6 24V | | | OB0013 | 0986B00013 | | | | | | |
| ALFA ROMEO | 164 2.0i T.S. | AR06420 | 01.92 => | OB0014 | 0986B00014 | | | F5087 | 0450905087 | | |
| ALFA ROMEO | 164 2.0i V6 Turbo | | | OB0017 | 0986B00017 | | | F5087 | 0450905087 | | |
| ALFA ROMEO | 164 3.0i V6 12v | | | OB0017 | 0986B00017 | | | F5087 | 0450905087 | | |
| ALFA ROMEO | 164 3.0i V6 24v | | | P3351 | 0451103351 | | | F5087 | 0450905087 | | |
| ALFA ROMEO | 166 3.0i V6 | | | P3351 | 0451103351 | | | | | | |
| ALFA ROMEO | Giulietta (940) 1.4 TB 16V | 88KW120CV | 05.10 => | P9256 | 1457429256 | | | | | | |
| ALFA ROMEO | GT 1.9 JTD | | 01.06 => | P3300 | 0451103300 | | | | | | |
| ALFA ROMEO | GTV 3.0i V6 24 V | | | OB0017 | 0986B00017 | | | | | | |
| ALFA ROMEO | Spider 2.0i.e. | | | OB0014 | 0986B00014 | | | GB0234 | 0986450234 | | |
| ALFA ROMEO | Spider 3.0i V6 12v | | | OB0017 | 0986B00017 | | | F5087 | 0450905087 | | |
| AGCO | | | | | | | | | | | |
| AGCO | 6.110 | DeutzBF4M1012EC | | | | AB3004 | 0986B03004 | DB0519 | 0986450519 | | |
| AGCO | | | | | | AB3402 | 0986B03402 | | | | |

| MARCA | VEHÍCULO | MOTOR | FECHA | SC | ACEITE | SC | AIRE | SC | COMBUSTIBLE | SC | HABITÁCULO |
|---|---|---|---|---|---|---|---|---|---|---|---|
| AGCO | | | | | | AB3002 | 0986B03002 | | | | |
| AGCO | | | | | | AB3400 | 0986B03400 | | | | |
| AGCO | 6.150 | DeutzBF6L913 | | P3001 | 0451403001 | AB3001 | 0986B03001 | DB0421 | 0986BF0421 | | |
| AGCO | | | | | | AB3408 | 0986B03408 | | | | |
| AGCO | 6.175 | DeutzBF6L913CTurbo | | P3001 | 0451403001 | AB3006(P) | 0986B03006 | DB0421 | 0986BF0421 | | |
| AGCO | | | | | | AB3403 | 0986B03403 | | | | |
| AGCO | 6.190 | DeutzBF6L913C | | P3001 | 0451403001 | AB3006(P) | 0986B03006 | DB0421 | 0986BF0421 | | |
| AGCO | | | | | | AB3403 | 0986B03403 | | | | |
| AGCO | 6.220 | DeutzBF6L913C | | P3001 | 0451403001 | AB3006(P) | 0986B03006 | DB0217(Elem.SA) | 0986BF0217 | | |
| AGCO | | | | | | AB3403 | 0986B03403 | | | | |
| AGCO | 6.65 | DeutzBF4M1012E | | | | AB3004 | 0986B03004 | DB0519 | 0986450519 | | |
| AGCO | | | | | | AB3402 | 0986B03402 | | | | |
| AGCO | | | | | | AB3002 | 0986B03002 | | | | |
| AGCO | | | | | | AB3400 | 0986B03400 | | | | |
| AGCO | Optima 440 | BF6L914C | | OB1027 | 0986B01027 | AB3515(P) | 0986B03515 | DB0421 | 0986BF0421 | | |
| AGCO | | | | | | | | | | | |
| AGRALE | | | | | | | | | | | |
| AGRALE | 1322 H | BF6L913C | | P3001 | 0451403001 | AB3513 | 0986B03513 | DB0421 | 0986BF0421 | | |
| AGRALE | | | | | | AB3905 | 0986B03905 | DB0731 | 0986450731 | | |
| AGRALE | 300 Turbo | BF6L513RC | | OB1027 | 0986B01027 | AB3515(P) | 0986B03515 | DB0732 | 0986450732 | | |
| AGRALE | | | | OB1016 | 0986B01016 | AB3408(S) | 0986B03408 | | | | |
| AGRALE | 5000 E-Mec | MWMSprint4.07TCA | 01.06 => | | | AB3300 | 0986B03300 | | | | |
| AGRALE | | | | | | AB3408 | 0986B03408 | | | | |
| AGRALE | 7000 4.3i Turbo | MWM4.10 | 01.00 => | OB1027 | 0986B01027 | AB3001(P) | 0986B03001 | DB0220(Elem.SA) | 0986BF0220 | | |
| AGRALE | | | | | | AB3408 | 0986B03408 | | | | |
| AGRALE | 7500 4.3i | MWM4.10T | 01.00 => | OB1027 | 0986B01027 | AB3001(P) | 0986B03001 | DB0220(Elem.SA) | 0986BF0220 | | |
| AGRALE | | | | | | AB3408 | 0986B03408 | | | | |
| AGRALE | 7500-8500 | MWM4.10Turbo | 01.00 => | OB1027 | 0986B01027 | AB3001(P) | 0986B03001 | DB0220(Elem.SA) | 0986BF0220 | | |
| AGRALE | | | | | | AB3408 | 0986B03408 | | | | |
| AGRALE | 8500 ( E-Tronic ) | MWM4.12TCE | 03.06 => | OB1027 | 0986B01027 | AB3001(P) | 0986B03001 | DB0235 | 0986BF0235 | | |
| AGRALE | | | | | | AB3408(S) | 0986B03408 | | | | |
| AGRALE | 8500 4.3i | MWM4.10T | 01.00 => | OB1027 | 0986B01027 | AB3001(P) | 0986B03001 | DB0220(Elem.SA) | 0986BF0220 | | |
| AGRALE | | | | | | AB3408 | 0986B03408 | | | | |
| AGRALE | 9200 E( E-Tronic ) | MWM4.12TCE | 03.06 => | OB1027 | 0986B01027 | AB3001(P) | 0986B03001 | DB0220(Elem.SA) | 0986BF0220 | | |
| AGRALE | | | | | | AB3408 | 0986B03408 | DB0235 | 0986BF0235 | | |
| AGRALE | | | | | | | | DB0726(BoxSA) | 0986450726 | | |
| AGRALE | A130 | F6L1114-F6LO2114 | | OB1027 | 0986B01027 | AB3511(P) | 0986B03511 | DB0421 | 0986BF0421 | | |
| AGRALE | | | | | | AB3903 | 0986B03903 | DB0420(P) | 0986BF0420 | | |
| AGRALE | A30-A40 | F3L1114-F3L2114 | | | | | | DB0421 | 0986BF0421 | | |

| MARCA | VEHÍCULO | MOTOR | FECHA | SC | ACEITE | SC | AIRE | SC | COMBUSTIBLE | SC | HABITÁCULO |
|---|---|---|---|---|---|---|---|---|---|---|---|
| AGRALE | | | | | | | | DB0420(P) | 0986BF0420 | | |
| AGRALE | A4007/5207/6007/6207 | F4L913 | | | | AB3534 | 0986B03534 | | | | |
| AGRALE | | | | | | | | | | | |
| AGRALE | A55-A65 | F3L1114-F3L2114 | | | | | | DB0421 | 0986BF0421 | | |
| AGRALE | | | | | | | | DB0420(P) | 0986BF0420 | | |
| AGRALE | A70-A85-A100 | F4L1114-F4L2114 | | OB1027 | 0986B01027 | | | DB0421 | 0986BF0421 | | |
| AGRALE | | | | | | | | DB0420(P) | 0986BF0420 | | |
| AGRALE | Araus Maxima 4040 | BF6L913C | | P3001 | 0451403001 | AB3513 | 0986B03513 | DB0421 | 0986BF0421 | | |
| AGRALE | | | | | | AB3905 | 0986B03905 | DB0731 | 0986450731 | | |
| AGRALE | AX 100S / AX 160 | | | P3001 | 0451403001 | AB3513 | 0986B03513 | DB0421 | 0986BF0421 | | |
| AGRALE | | | | | | AB3905 | 0986B03905 | DB0731 | 0986450731 | | |
| AGRALE | AX 160 | | => 12.83 | P3001 | 0451403001 | AB3535 | 0986B03535 | DB0421 | 0986BF0421 | | |
| AGRALE | | | | | | AB3904 | 0986B03904 | DB0731 | 0986450731 | | |
| AGRALE | AX 160 S Turbo | BF6L913T | => 12.83 | P3001 | 0451403001 | AB3535 | 0986B03535 | DB0421 | 0986BF0421 | | |
| AGRALE | | | | | | AB3904 | 0986B03904 | DB0731 | 0986450731 | | |
| AGRALE | AX 4.140 | BF6L913T | => 12.83 | P3001 | 0451403001 | AB3535 | 0986B03535 | DB0421 | 0986BF0421 | | |
| AGRALE | | | | | | AB3904 | 0986B03904 | DB0731 | 0986450731 | | |
| AGRALE | AX 4.160 | BF6L913 | => 12.83 | P3001 | 0451403001 | AB3535 | 0986B03535 | DB0421 | 0986BF0421 | | |
| AGRALE | | | | | | AB3904 | 0986B03904 | DB0731 | 0986450731 | | |
| AGRALE | AX 4.190 | BF6L913C | => 01.83 | P3001 | 0451403001 | AB3513 | 0986B03513 | DB0421 | 0986BF0421 | | |
| AGRALE | | | | | | AB3905 | 0986B03905 | DB0731 | 0986450731 | | |
| AGRALE | AX 4.60 / 5.65 / 5.80 | F3L913 | => 12.83 | OB1027 | 0986B01027 | AB3534(P) | 0986B03534 | DB0421 | 0986BF0421 | | |
| AGRALE | | | | | | | | DB0731 | 0986450731 | | |
| AGRALE | AX 5.125 / AX 5.145 | BF6L913 | => 12.83 | OB1027 | 0986B01027 | AB3535(P) | 0986B03535 | DB0421 | 0986BF0421 | | |
| AGRALE | | | | | | AB3904 | 0986B03904 | DB0731 | 0986450731 | | |
| AGRALE | AX 5.170 Turbo | BF6L913C | | OB1027 | 0986B01027 | AB3513(P) | 0986B03513 | DB0421 | 0986BF0421 | | |
| AGRALE | | | | | | AB3905 | 0986B03905 | DB0731 | 0986450731 | | |
| AGRALE | AX 5.190 Turbo | BF6L913C | | P3001 | 0451403001 | AB3513 | 0986B03513 | DB0421 | 0986BF0421 | | |
| AGRALE | | | | | | AB3905 | 0986B03905 | | | | |
| AGRALE | AX 5.220 | BF6L913C | | P3001 | 0451403001 | AB3513 | 0986B03513 | DB0731 | 0986450731 | | |
| AGRALE | | | | | | AB3905 | 0986B03905 | DB0421 | 0986BF0421 | | |
| AGRALE | Furgovan 6000 | MWM2.8Sprint4.07TCA | 01.02 => | OB1016 | 0986B01016 | AB3001(P) | 0986B03001 | DB0851 | 0986450851 | | |
| AGRALE | | | | | | AB3408 | 0986B03408 | | | | |
| AGRALE | Furgovan 6000 E | MWM4.08TCE | 01.05 => | | | AB3001 | 0986B03001 | DB0235 | 0986BF0235 | | |
| AGRALE | | | | | | AB3408 | 0986B03408 | DB0726(BoxSA) | 0986450726 | | |
| AGRALE | Furgovan 6000 E | MWM4.07TCE | 01.06 => | | | AB3001 | 0986B03001 | DB0235 | 0986BF0235 | | |
| AGRALE | | | | | | AB3408 | 0986B03408 | DB0726(BoxSA) | 0986450726 | | |
| AGRALE | Optima 650 | CUMMINS BF6M1013ECP | | OB1011 | 0986B01011 | | | DB0713 | 0986450713 | | |
| AGRALE | Optima E | CUMMINS BF6L913 | | P3001 | 0451403001 | AB3535 | 0986B03535 | DB0421 | 0986BF0421 | | |

| MARCA | VEHÍCULO | MOTOR | FECHA | SC | ACEITE | SC | AIRE | SC | COMBUSTIBLE | SC | HABITÁCULO |
|---|---|---|---|---|---|---|---|---|---|---|---|
| AGRALE | | | | | | AB3904 | 0986B03904 | DB0731 | 0986450731 | | |
| AGRALE | Powermax 300 Turbo | BF6L513RC | | OB1027 | 0986B01027 | AB3515(P) | 0986B03515 | | | | |
| AGRALE | | | | | | | | | | | |
| AGRALE | Stallion 11.130 / 15.160 Turbo | F6L913v | | P3001 | 0451403001 | AB3535 | 0986B03535 | | | | |
| AGRALE | | | | | | AB3904 | 0986B03904 | | | | |
| AGRALE | MA 7.5 ( E-Tronic ) | MWM4.12TCE | 01.05 => | OB1027 | 0986B01027 | AB3001(P) | 0986B03001 | DB0369(SA) | 0986BF0369 | | |
| AGRALE | | | | | | | | DB0235 | 0986BF0235 | | |
| AGRALE | | | | | | | | DB0726(BoxSA) | 0986450726 | | |
| AGRALE | MA 7.5 T | MWM4.10TCA | 01.96 => | OB1027 | 0986B01027 | AB3535(P) | 0986B03535 | DB0369(SA) | 0986BF0369 | | |
| AGRALE | | | | | | AB3904 | 0986B03904 | DB0219(Elem.SA) | 0986BF0219 | | |
| AGRALE | MA 8.5 | MWM4.10TCA | 01.96 => | OB1027 | 0986B01027 | AB3535(P) | 0986B03535 | DB0369(SA) | 0986BF0369 | | |
| AGRALE | | | | | | AB3904 | 0986B03904 | DB0219(Elem.SA) | 0986BF0219 | | |
| AGRALE | MA 8.5 ( E-Tronic ) | MWM4.12TCE | 01.05 => | OB1027 | 0986B01027 | AB3006(P) | 0986B03006 | DB0369(SA) | 0986BF0369 | | |
| AGRALE | | | | | | AB3403 | 0986B03403 | DB0235 | 0986BF0235 | | |
| AGRALE | | | | | | | | DB0726(BoxSA) | 0986450726 | | |
| AGRALE | MA 9.2 ( E-Tronic ) | MWM4.12TCE | 01.06 => | OB1027 | 0986B01027 | AB3006(P) | 0986B03006 | DB0369(SA) | 0986BF0369 | | |
| AGRALE | | | | | | AB3403 | 0986B03403 | DB0235 | 0986BF0235 | | |
| AGRALE | | | | | | | | DB0726(BoxSA) | 0986450726 | | |
| AGRALE | MT 12.0 | CumminsInt.6ISBE | 01.06 => | OB0511 | 0986B00511 | AB3006(P) | 0986B03006 | DB0368 | 0986BF0368 | | |
| AGRALE | | | | | | AB3403 | 0986B03403 | DB0235 | 0986BF0235 | | |
| AGRALE | MA/MT 15.0 | MWMActeon4.12TCE | 01.07 => | OB1027 | 0986B01027 | AB3006(P) | 0986B03006 | DB0369(SA) | 0986BF0369 | | |
| AGRALE | | | | | | AB3403 | 0986B03403 | DB0235 | 0986BF0235 | | |
| AGRALE | Volare A 8 | MWM4.10TCA | 01.98 => | OB1027 | 0986B01027 | AB3535(P) | 0986B03535 | DB0369(SA) | 0986BF0369 | | |
| AGRALE | | | | | | AB3904 | 0986B03904 | DB0219(Elem.SA) | 0986BF0219 | | |
| AGRALE | | | | | | AB3001 | 0986B03001 | DB0729(BOXSA) | 0986450729 | | |
| AGRALE | Volare W 8 | MWM4.12TCE | 03.06 => | OB1027 | 0986B01027 | AB3006(P) | 0986B03006 | DB0369(SA) | 0986BF0369 | | |
| AGRALE | | | | | | AB3403 | 0986B03403 | DB0235 | 0986BF0235 | | |
| AGRALE | | | | | | | | DB0726(BoxSA) | 0986450726 | | |
| AGRALE | Volare W 9 | MWM4.12TCE | 11.06 => | OB1027 | 0986B01027 | AB3006(P) | 0986B03006 | DB0369(SA) | 0986BF0369 | | |
| AGRALE | | | | | | AB3403 | 0986B03403 | DB0235 | 0986BF0235 | | |
| AGRALE | | | | | | | | DB0726(BoxSA) | 0986450726 | | |
| AGRALE | Micro Deutz 1015 | OA104 | | OB1027 | 0986B01027 | | | | | | |
| ASIA | | | | | | | | | | | |
| ASIA | Towner CD 800 (Truck-Glass-Panel Van-Coach) | | 01.97 => | OB0023 | 0986B00023 | | | GB0008 | 0986BF0008 | | |
| ASIA | Topic Minibus | | 01.93 => | OB0010 | 0986B00010 | | | DB0719 | 0986450719 | | |
| AUDI | | | | | | | | | | | |
| AUDI | A 1 I | 1.4TFSCAXA | 01.11 => | P7181 | F026407181 | | | F5959 | 0450905959 | CB0512 | 0986BF0512 |
| AUDI | A 1 | 1.4TFSI | 01.16 => | OB0064 | 0986B00064 | | | F5959 | 0450905959 | | |
| AUDI | A 3 1.6 | | 01.99 => | OB0004 | 0986B00004 | AB2310 | 0986B02310 | F5318 | 0450905318 | CB0506 | 0986BF0506 |

| MARCA | VEHÍCULO | MOTOR | FECHA | SC | ACEITE | SC | AIRE | SC | COMBUSTIBLE | SC | HABITÁCULO |
|---|---|---|---|---|---|---|---|---|---|---|---|
| AUDI | A 3 1.6 | BGU,BSE,BSF,CCSA,CMXA | 05.03 => | OB0004 | 0986B00004 | S9405 | 1987429405 | F5925 | 0450905925 | M2097 | 1987432097 |
| AUDI | | | | | | | | F3006 | F026403006 | | |
| AUDI | A 3 1.6 FSI | BAG-BLF-BLP | 09.03 => 09.07 | P9301 | 1457429301 | S9405 | 1987429405 | F5959 | 0450905959 | M2097 | 1987432097 |
| AUDI | A 3 1.8 - 1.8T | | => 4.97 | OB0004 | 0986B00004 | AB2310 | 0986B02310 | F5318 | 0450905318 | CB0506 | 0986BF0506 |
| AUDI | A 3 1.8 - 1.8T | | 05.97 => | OB0004 | 0986B00004 | AB2310 | 0986B02310 | F5318 | 0450905318 | CKB | 0986BF0711 |
| AUDI | A 3 1.8 TFSI | BYT/BZB/CDAA | 11.06 => | P7080 | F026407080 | S9404 | 1987429404 | F5959 | 0450905959 | M2097 | 1987432097 |
| AUDI | A 3 | 1.9TDI | => 04.97 | OB0707 | 0986B00707 | AB2310 | 0986B02310 | DB0471 | 0986BF0471 | CB0506 | 0986BF0506 |
| AUDI | A 3 1.9 TD | | 05.97 => | OB0707 | 0986B00707 | AB2310 | 0986B02310 | DB0471 | 0986BF0471 | CKB | 0986BF0711 |
| AUDI | A 3 1.9 TDI | BKC/BLS/BXE | 05.03 => 09.09 | OB0708 | 0986B00708 | S9404 | 1987429404 | N0007 | 1457070007 | M2097 | 1987432097 |
| AUDI | A 3 1.9 TDI | AHF/ASV | 11.96 => 08.01 | | | | | DB0471 | 0986BF0471 | | |
| AUDI | A 3 1.9 Sportback | BKC | 01.04=> | OB0708 | 0986B00708 | S9404 | 1987429404 | N0007 | 1457070007 | M2097 | 1987432097 |
| AUDI | A 3 2.0 Sportback FSI | | 01.04=> | OB0709 | 0986B00709 | S9405 | 1987429405 | F5959 | 0450905959 | M2097 | 1987432097 |
| AUDI | A 3 2.0 FSI | BWA | 11.05 => 06.08 | OB0709 | 0986B00709 | S3102 | 1457433102 | F5959 | 0450905959 | M2097 | 1987432097 |
| AUDI | | | | P7080 | F026407080 | | | | | | |
| AUDI | A 3 2.0 FSI Sportback | | 11.05 => 06.08 | OB0709 | 0986B00709 | S9405 | 1987429405 | N0007 | 1457070007 | M2097 | 1987432097 |
| AUDI | A 3 2.0 TFSI | AXX/BPY/BWA/CAWB/CBFA/CCTA/ | 09.05 => 06.08 | OB0709 | 0986B00709 | S3102 | 1457433102 | F5959 | 0450905959 | M2097 | 1987432097 |
| AUDI | | | | P7080 | F026407080 | | | | | | |
| AUDI | A 3 2.0 TFSI Sportback | | 09.05 => 06.08 | OB0709 | 0986B00709 | S3102 | 1457433102 | F5959 | 0450905959 | M2097 | 1987432097 |
| AUDI | A 3 1.4 TFSI | CAXC | 06.10 => | P7181 | F026407181 | S9405 | 1987429405 | F5959 | 0450905959 | M2097 | 1987432097 |
| AUDI | A 3 1.4 TFSI | CMBA/CXSA | 08.12 =>03.17 | OB0064 | 0986B00064 | | | | | | |
| AUDI | A 3 2.0 TDI | AZV/BKD/BMM | 03.05 => 06.08 | OB0708 | 0986B00708 | S9404 | 1987429404 | N0007 | 1457070007 | M2097 | 1987432097 |
| AUDI | | | | OB0708 | 0986B00708 | S9404 | 1987429404 | N0008 | 1457070008 | | |
| AUDI | | | | | | | | N0013 | 1457070013 | | |
| AUDI | A 3 2.0 TDI | BKD,BMM,CBAB,CFFB,CLJ | 05.03=> | OB0708 | 0986B00708 | S9404 | 1987429404 | N0008 | 1457070008 | M2097 | 1987432097 |
| AUDI | | | | | | | | N0007 | 1457070007 | | |
| AUDI | | | | | | | | N0013 | 1457070013 | | |
| AUDI | A 3 3.2 V6 quattro | BDB,BMJ,BUB | 09.03 => | OB0708 | 0986B00708 | AB2378 | 0986B02378 | F5925 | 0450905925 | M2097 | 1987432097 |
| AUDI | A 3 3.2 V6 Sportback | | 01.05 => | OB0708 | 0986B00708 | S9405 | 1987429405 | F5959 | 0450905959 | M2097 | 1987432097 |
| AUDI | A 3 1.8 - 1.8T | Chasis B6 | | OB0004 | 0986B00004 | S3046 | 1457433046 | F5318 | 0450905318 | | |
| AUDI | A 3 1.8 - 1.8T | Chasis B5 | | OB0004 | 0986B00004 | AB2316 | 0986B02316 | F5318 | 0450905318 | | |
| AUDI | A 4 1.8 Turbo | AJL | | OB0004 | 0986B00004 | AB2316 | 0986B02316 | F5906 | 0450905906 | | |
| AUDI | A 4 1.8 20v | ADR/APT/ARG/AFY | 01.95 => 09.01 | OB0004 | 0986B00004 | AB2316 | 0986B02316 | GB0234 | 0986450234 | | |
| AUDI | A 4 1.8 T | AVJ | 11.00 => 07.02 | OB0004 | 0986B00004 | S3046 | 1457433046 | GB0234 | 0986450234 | | |
| AUDI | A 4 1.8 TFSI | CABB/CDHB | 11.07 =>03.12 | P7080 | F026407080 | S0157 | F026400157 | | | R2369(CA) | 1987432369 |
| AUDI | A 4 1.8 TFSI | CABA/CDHA | 01.08 => | P7080 | F026407080 | S0157 | F026400157 | | | R2369(CA) | 1987432369 |
| AUDI | A 4 1.9 TDI | AVF/AWX | 11.00 => 12.04 | OB0707 | 0986B00707 | S3046 | 1457433046 | DB0471 | 0986BF0471 | | |
| AUDI | A 4 1.9 TDI | AFN/AVG | 10.95 => 09.01 | OB1038 | 0986B01038 | AB2316 | 0986B02316 | N4184 | 1457434184 | | |
| AUDI | A 4 1.9 TDI | AJM/ATJ | 04.99 => 09.01 | | | AB2316 | 0986B02316 | N4184 | 1457434184 | | |
| AUDI | A4 1.9 TDI Cabriolet | 1Z | 06.95 => 10.00 | | | | | N4184 | 1457434184 | | |

| MARCA | VEHÍCULO | MOTOR | FECHA | SC | ACEITE | SC | AIRE | SC | COMBUSTIBLE | SC | HABITÁCULO |
|---|---|---|---|---|---|---|---|---|---|---|---|
| AUDI | A 4 2.0 TDI | BLB/BNA/BPW/BRC | 11.04 => 09.08 | OB0708 | 0986B00708 | S3046 | 1457433046 | DB0471 | 0986BF0471 | | |
| AUDI | A 4 2.0 TDI | BLB/BNA/BPW/BRC | 11.04 => 09.08 | | | | | N6429 | 0450906429 | | |
| AUDI | A 4 2.0 TDI | CAGA,CAGB | 09.08 => | OB0708 | 0986B00708 | S0157 | F026400157 | N2068 | F026402068 | R2369(CA) | 1987432369 |
| AUDI | A 4 2.0 TDI | CJCA,CMFA | 09.08 => | OB0706 | 0986B00706 | S0157 | F026400157 | N2068 | F026402068 | R2369(CA) | 1987432369 |
| AUDI | A 4 2.0 TDI | CJCD,CMFB,CSUA | 05.13 => | OB0706 | 0986B00706 | S0157 | F026400157 | N2068 | F026402068 | R2369(CA) | 1987432369 |
| AUDI | A 4 2.0 TFSI | | 09.05 => 06.08 | OB0709 | 0986B00709 | S3046 | 1457433046 | | | R2369(CA) | 1987432369 |
| AUDI | A 4 2.0 TFSI | CAEA/CDNB/CFKA | 06.08 => | P7080 | F026407080 | S0157 | F026400157 | | | R2369(CA) | 1987432369 |
| AUDI | A 4 2.0 TFSI | CAEB/CDNC | 06.08 => | P7080 | F026407080 | S0157 | F026400157 | | | R2369(CA) | 1987432369 |
| AUDI | A 4 2.4 30v | AGA/ALF/AJG | 03.97 => 09.01 | P3313 | 0451103313 | AB2316 | 0986B02316 | F5906 | 0450905906 | | |
| AUDI | A 4 2.4 30v | AML/APS/APZ/ARJ | 08.98 => 09.01 | P3313 | 0451103313 | AB2316 | 0986B02316 | F5906 | 0450905906 | | |
| AUDI | A 4 2.5 TDI | BCZ/BDG/BFC | 04.01 => 06.02 | P9152 | 1457429152 | S3046 | 1457433046 | | | M2071 | 1987432071 |
| AUDI | A 4 2.5 TDI | AKE/BAU/BDH | 11.00 => 12.05 | P9152 | 1457429152 | S3046 | 1457433046 | N0509 | 0986450509 | | |
| AUDI | A 4 2.5 TDI Avant | | 09.01 => 06.02 | P9152 | 1457429152 | S3046 | 1457433046 | N0509 | 0986450509 | | |
| AUDI | A 4 2.5 TDI quattro | | 11.97 => 06.00 | P9152 | 1457429152 | S3046 | 1457433046 | N0509 | 0986450509 | | |
| AUDI | A 4 2.8 30v | ACK/ALG/APR/AQD/ATX | 10.96 => 09.01 | P3313 | 0451103313 | AB2316 | 0986B02316 | F5906 | 0450905906 | | |
| AUDI | A 4 2.8 V6 Cabriolet | AAH | 11.92 => 10.00 | P3313 | 0451103313 | | | F5906 | 0450905906 | | |
| AUDI | A 4 3.0 V6 | ASN/AVK/BBJ | 11.00 => 06.08 | P3313 | 0451103313 | S3046 | 1457433046 | F5318 | 0450905318 | M2071 | 1987432071 |
| AUDI | A 4 3.0 TDI | 3.0TDI | 01.05 => | | | S3046 | 1457433046 | | | | |
| AUDI | A 5 2.0 TFSI | CDNC | 06.08 => | P7080 | F026407080 | S0157 | F026400157 | | | | |
| AUDI | A 5 2.0 TDI | CMEA | 02.12 => | OB0706 | 0986B00706 | S0157 | F026400157 | N2068 | F026402068 | R2369(CA) | 1987432369 |
| AUDI | A 6 1.9 TDI | AFN/AVG | 02.97 => 05.01 | | | | | N4184 | 1457434184 | | |
| AUDI | A 6 2.4 30v | AGA/AJG/ALF/AML | 02.97 => 06.01 | P3313 | 0451103313 | | | F5201 | 0450905201 | | |
| AUDI | A 6 2.4 | | => 10.98 | P3313 | 0451103313 | | | F5318 | 0450905318 | | |
| AUDI | A 6 2.5 TDI V6 | AFB/AKN | 07.97 => 06.01 | P9152 | 1457429152 | S3772 | 1457433772 | N0509 | 0986450509 | | |
| AUDI | A 6 2.5 TDI | | 06.98 => | P9152 | 1457429152 | | | | | | |
| AUDI | A 6 2.5 TDI | AYM | 05.01 => 08.02 | P9152 | 1457429152 | S3772 | 1457433772 | | | | |
| AUDI | A 6 2.7 biturbo | | 02.99 => 08.00 | P3313 | 0451103313 | | | F5906 | 0450905906 | | |
| AUDI | A 6 2.8 30v | ACK/ALG/APR/AQD | 02.97 => 06.01 | P3313 | 0451103313 | | | F5318 | 0450905318 | | |
| AUDI | A 6 2.8 V6 | AAH | 06.94 => 02.97 | P3313 | 0451103313 | | | F5318 | 0450905318 | | |
| AUDI | A 6 3.0 | | | P3313 | 0451103313 | | | F5318 | 0450905318 | | |
| AUDI | A 6 3.0 Tdi V6 | ASB | 05.06 => 10.08 | P7002/1 | F026407002 | | | | | | |
| AUDI | A 8 4.2 V8 | AQH/AVP | 05.99 => 09.02 | P9142 | 1457429142 | | | F5906 | 0450905906 | | |
| AUDI | A 8 | 3.0TDI | 01.05 => | | | | | | | | |
| AUDI | Allroad 2.5 V TDI | | | P9152 | 1457429152 | | | | | | |
| AUDI | Allroad 2.7 V6 biturbo | | | P3313 | 0451103313 | | | F5906 | 0450905906 | | |
| AUDI | Cabrio 2.8 V6 | | 11.92 => 10.00 | P3313 | 0451103313 | | | F5906 | 0450905906 | | |
| AUDI | Cabrio 3.0 | | | P3313 | 0451103313 | S3046 | 1457433046 | F5318 | 0450905318 | M2071 | 1987432071 |
| AUDI | Q 2 | 1.4TFSI(CZEA) | 03.17 => | OB0064 | 0986B00064 | | | | | | |
| AUDI | Q 3 | 1.4TFSI(CHPB,CZDA,CZEA) | 01.16 => | OB0064 | 0986B00064 | | | | | M2097 | 1987432097 |

| MARCA | VEHÍCULO | MOTOR | FECHA | SC | ACEITE | SC | AIRE | SC | COMBUSTIBLE | SC | HABITÁCULO |
|---|---|---|---|---|---|---|---|---|---|---|---|
| AUDI | Q 5 2.0 TFSI | CDNC | 11.08 => | P7080 | F026407080 | S0157 | F026400157 | | | R2369(CA) | 1987432369 |
| AUDI | Q 5 2.0 TDI | CAHA | 09.09 => | OB0708 | 0986B00708 | S0157 | F026400157 | N2068 | F026402068 | R2369(CA) | 1987432369 |
| AUDI | Q 7 | 3.0TDIV6Quattro(BUG) | 03.06 =>05.10 | P7002/1 | F026407002 | S9190 | 1987429190 | | | CB0575 | 0986BF0575 |
| AUDI | Q 7 | 3.0TDIV6Quattro(BUG) | 06.10 => | P7002/1 | F026407002 | S9190 | 1987429190 | N2068 | F026402068 | CB0575 | 0986BF0575 |
| AUDI | S3 1.8 T quattro | | | OB0004 | 0986B00004 | AB2310 | 0986B02310 | F5318 | 0450905318 | CB0506 | 0986BF0506 |
| AUDI | S4 2.7 V6 quattro biturbo | | | P3313 | 0451103313 | AB2316 | 0986B02316 | F5906 | 0450905906 | | |
| AUDI | S4 | 4.2V8 32v | | | | | | F5318 | 0450905318 | M2071 | 1987432071 |
| AUDI | TT Coupe - Roadster 1.8T | | | OB0004 | 0986B00004 | AB2310 | 0986B02310 | F5318 | 0450905318 | CB0506 | 0986BF0506 |
| AUDI | TT 3.2 V6 quattro | 3.2V6quattro | 01.07 => | OB0708 | 0986B00708 | AB2378 | 0986B02378 | F5318 | 0450905318 | CKB | 0986BF0711 |
| AUDI | TT 2.0 TFSI | BWA/BPY/CCZA | 09.06 => | OB0709 | 0986B00709 | S3102 | 1457433102 | F5959 | 0450905959 | M2097 | 1987432097 |
| AUDI | TT 2.0 TFSI | CDLA,CDMA,CDLB | 05.08 => | OB0709 | 0986B00709 | AB2378 | 0986B02378 | F5959 | 0450905959 | | |
| AUDI | TT 2.5 TFSI | CEPA | 06.09 => | | | AB2378 | 0986B02378 | | | | |
| | | | | | | | | | | | |
| BMW | | | | | | | | | | | |
| BMW | 116 i | | | | | | | | | | |
| BMW | 120 i E81/E87 | N46B20 | 09.04 => 02.07 | | | S0018 | F026400018 | | | | |
| BMW | 120 d 2.0 16v Diesel | | 01.05 => | P9185 | 1457429185 | S3588 | 1457433588 | | | | |
| BMW | 125i E82/E88 | N52B30A | 03.08 => | P9269 | 1457429269 | S0029 | F026400029 | | | | |
| BMW | 130 i E81/E87 | N52B30 | 09.05 => | P9269 | 1457429269 | S0029 | F026400029 | | | | |
| BMW | 135i E82/E88 | N54-N55/B30A | 09.07 => | P9269 | 1457429269 | | | | | | |
| BMW | 316 ti Compact 1.6 / 1.8 | ChasisE46 | 01.01 => 01.03 | | | | | F5952 | 0450905952 | | |
| BMW | 316 ti 1.6 Compact | ChasisE36 | => 01.97 | P9760 | 1457429760 | S3697 | 1457433697 | F5905 | 0450905905 | | |
| BMW | 318 tds 1.7 | M41D18 | 01.95 => 10.99 | P9275 | 1457429275 | S3616 | 1457433616 | | | | |
| BMW | 318 tds 1.7 Compact | 1.7Diesel-chasisE36 | 01.95 => 10.99 | P9275 | 1457429275 | S3616 | 1457433616 | | | | |
| BMW | 318 i 1.8 | | => 01.97 | P9760 | 1457429760 | S3697 | 1457433697 | F5905 | 0450905905 | | |
| BMW | 318 ti 1.8 Compact | ChasisE36 | 01.97 => 01.99 | P9760 | 1457429760 | S3697 | 1457433697 | F5905 | 0450905905 | | |
| BMW | 318 iS 1.8 | ChasisE36 | => 01.98 | P9760 | 1457429760 | S3697 | 1457433697 | F5905 | 0450905905 | | |
| BMW | 318 ti 1.8 Compact | ChasisE46 | 08.01 => 07.04 | | | | | | | | |
| BMW | 320 d 2.0 Diesel | ChasisE90 | 03.05 => | P9185 | 1457429185 | S3588 | 1457433588 | | | | |
| BMW | 320 d 2.0 Diesel | ChasisE46 | 09.01 => | P9185 | 1457429185 | S3588 | 1457433588 | | | | |
| BMW | 320 d 2.0 Diesel | ChasisE46 | 05.98 => 09.01 | P9119 | 1457429119 | S3588 | 1457433588 | N1708 | 1457431708 | | |
| BMW | 320 i 2.0 | ChasisE36 | 09.90 => 09.95 | P9638 | 1457429638 | S3004 | 1457433004 | F5905 | 0450905905 | | |
| BMW | 320 i 2.2 | ChasisE46 | 01.02 => | P7003 | 1457437003 | S3004 | 1457433004 | F5952 | 0450905952 | | |
| BMW | 320 i 2.2 | ChasisE46 | 04.98 => 09.01 | P7003 | 1457437003 | S3004 | 1457433004 | F5905 | 0450905905 | | |
| BMW | 320 i ( E90/E91/E92/E93 ) | N46B20A/B | 09.06 => | | | S0018 | F026400018 | | | | |
| BMW | 323 ti 2.5 Compact | ChasisE36 | | P7003 | 1457437003 | S3004 | 1457433004 | F5905 | 0450905905 | | |
| BMW | 323i 2.5 | ChasisE46 | | P7003 | 1457437003 | S3004 | 1457433004 | F5905 | 0450905905 | | |
| BMW | 325 i 2.5 - Cabrio - Coupé | ChasisE36 | 04.01 => 07.04 | P9638 | 1457429638 | S3004 | 1457433004 | | | | |
| BMW | 325i - Ci 2.5 | ChasisE46 | 01.02 => | P7003 | 1457437003 | S3004 | 1457433004 | F5952 | 0450905952 | | |

| MARCA | VEHÍCULO | MOTOR | FECHA | SC | ACEITE | SC | AIRE | SC | COMBUSTIBLE | SC | HABITÁCULO |
|---|---|---|---|---|---|---|---|---|---|---|---|
| BMW | 325 ti 2.5 Compact | ChasisE46 | 01.03 => | P7003 | 1457437003 | S3004 | 1457433004 | F5952 | 0450905952 | | |
| BMW | 328 i - Ci 2.8 Coupe - Touring | ChasisE46 | => 09.00 | P7003 | 1457437003 | S3004 | 1457433004 | F5905 | 0450905905 | | |
| BMW | 328 i - Ci 2.8 Coupe - Touring - Cabrio | ChasisE36 | => 09.95 | P9638 | 1457429638 | S3004 | 1457433004 | F5905 | 0450905905 | | |
| BMW | 330 d 3.0 Diesel | | 09.05 => 08.08 | P9252 | 1457429252 | | | | | | |
| BMW | 330 d | 3.0DieselM57D30 | => 02.03 | P9118 | 1457429118 | | | | | | |
| BMW | 330 i - Ci -3.0 24v Cabrio - | ChasisE46 | 01.01 => | P7003 | 1457437003 | S3004 | 1457433004 | F5952 | 0450905952 | | |
| BMW | 330i E90/E91 | N52B30 | 03.05 => | P9269 | 1457429269 | S0029 | F026400029 | | | | |
| BMW | 330i E92/E93 | N53B30A | 09.06 => | P9269 | 1457429269 | S0029 | F026400029 | | | | |
| BMW | 523i 2.5 | ChasisE39 | => 09.00 | P7003 | 1457437003 | S3004 | 1457433004 | F5905 | 0450905905 | | |
| BMW | 525 tds 2.5 Diesel | M51D25 | 03.93 => 09.96 | P9139 | 1457429139 | | | | | | |
| BMW | 525 i 2.5 24v | ChasisE60/61 | 07.03 => 04.05 | P7003 | 1457437003 | | | | | | |
| BMW | 525 i 2.5 24v | ChasisE39 | 01.02 => 01.03 | P7003 | 1457437003 | S3004 | 1457433004 | | | | |
| BMW | 525i E60/E61 | N52B25 | 04.05 => 12.10 | P9269 | 1457429269 | S3094 | 1457433094 | | | | |
| BMW | 528 i 2.8 | ChasisE39 | 01.98 => 01.02 | P7003 | 1457437003 | S3004 | 1457433004 | F5905 | 0450905905 | | |
| BMW | 530 i 3.0 | ChasisE60M54B30 | 07.03 => 04.05 | P7003 | 1457437003 | S3094 | 1457433094 | | | | |
| BMW | 530 i 3.0 | ChasisE39 | 09.00 => | P7003 | 1457437003 | S3004 | 1457433004 | | | | |
| BMW | 530 d 3.0 Diesel | ChasisE60 | 07.03 => 09.05 | P9252 | 1457429252 | | | | | | |
| BMW | 530 d | 3.0Diesel-chasisE39 | | | | | | | | | |
| BMW | 540 i 4.4 | ChasisE39 | 01.96 => | P9141 | 1457429141 | | | | | | |
| BMW | 545 i | 4.4-chasisE60 | 04 => | | | | | | | | |
| BMW | 645 i - Ci Coupe - Cabrio | 4.4-chasisE63-E64 | | | | | | | | | |
| BMW | 650 Ci - Coupe - Cabrio | 4.8V832v | | | | | | | | | |
| BMW | 740 i - iL 4.4 | ChasisE38 | 01.96 => 12.03 | P9141 | 1457429141 | | | F5905 | 0450905905 | | |
| BMW | 745 i - iL | 4.4-chasisE65-E66 | 11-01 => | | | | | | | | |
| BMW | 750 i 5.4 | ChasisE38 | 10.95 => | P9141 | 1457429141 | | | F5905 | 0450905905 | | |
| BMW | 750 i - iL | 4.8-chasisE65-E66 | | | | | | | | | |
| BMW | 850 Ci 5.4 | ChasisE31 | | P9141 | 1457429141 | | | F5901 | 0450905901 | | |
| BMW | M3 | 3.2-chasisE36 | 10.95 => 12.99 | | | S3004 | 1457433004 | | | | |
| BMW | M3 | 3.224v-chasisE46 | 09.00 => | | | S3004 | 1457433004 | | | | |
| BMW | M5 | 5.0V10-ChasisE60 | 11-04 => | | | | | | | | |
| BMW | M5 5.0 | ChasisE39 | 10.98 => 07.03 | P9141 | 1457429141 | | | | | | |
| BMW | X3 2.5i | 2.5i | 03.04 => | P7003 | 1457437003 | S3004 | 1457433004 | | | | |
| BMW | X3 2.5 SI E83 | N52B25 | 09.06 => 12.10 | P9269 | 1457429269 | | | | | | |
| BMW | X3 3.0i | 3.0i | 01.04 => | P7003 | 1457437003 | S3004 | 1457433004 | | | | |
| BMW | X3 3.0 SI E83 | N52B30 | 09.06 => 12.10 | P9269 | 1457429269 | | | | | | |
| BMW | X3 3.0 Diesel | 3.0Diesel | 01.04 => | P7003 | 1457437003 | S3004 | 1457433004 | | | | |
| BMW | X5 3.0 24v | ChasisE53 | 10.99 => | P7003 | 1457437003 | | | | | | |
| BMW | X5 3.0 SI E70 | N52B30A | 11.06 => 06.10 | P9269 | 1457429269 | | | | | | |
| BMW | X5 3.0 Diesel | | 01.04 => 09.05 | P9252 | 1457429252 | | | | | | |

| MARCA | VEHÍCULO | MOTOR | FECHA | SC | ACEITE | SC | AIRE | SC | COMBUSTIBLE | SC | HABITÁCULO |
|---|---|---|---|---|---|---|---|---|---|---|---|
| BMW | X5 3.0 TDS | M57D30 | 05.00 => 10.03 | P9118 | 1457429118 | | | | | | |
| BMW | X5 4.4 i V8 32v | Chasis E53 | 03.99 => | P9141 | 1457429141 | | | | | | |
| BMW | X5 | 4.8iV8 32v | 03-04 => | | | | | | | | |
| BMW | Z3 Roadster 1.9i | | 09.98 => 09.02 | P9108 | 1457429108 | S3697 | 1457433697 | F5905 | 0450905905 | | |
| BMW | Serie 3 1.6-1.8-2.0-2.3-2.5-2.7 | Chasis E21-30-36 | => 12.96 | | | | | F5201 | 0450905201 | | |
| BMW | Serie 5 1.8-2.0-2.5-2.7-2.8-3.0-3.2-3.4-3.5 | Chasis E12-28-34 | 09.92 => 09.96 | | | | | F5201 | 0450905201 | | |
| BMW | Serie 6 | 2.8-3.2-3.4-Chasis E24 | => 01.89 | | | | | F5201 | 0450905201 | | |
| BMW | Serie 7 2.8-3.0-3.2-3.4-3.5 | Chasis E23-32 | 09.92 => 09.94 | | | | | F5201 | 0450905201 | | |
| BOBCAT | | | | | | | | | | | |
| BOBCAT | 700 S | | | OB1003 | 0986B01003 | | | | | | |
| BOBCAT | 843 | Perkins 4.154 | | OB1028 | 0986B01028 | | | | | | |
| BOBCAT | 980 | CUMMINS 4BT3.9 | | | | | | DB0713 | 0986450713 | | |
| BOBCAT | M 870 | CUMMINS NT855 | | | | | | | | | |
| BOMAG | | | | | | | | | | | |
| BOMAG | 45/30 | CUMMINS Aspy Turbo | | | | | | | | | |
| BOMAG | 10 AS / 12R | CUMMINS 4B3.9/4BT3.9 | | | | | | DB0713 | 0986450713 | | |
| BOMAG | 20 | CUMMINS 4B3.9 | | | | | | DB0713 | 0986450713 | | |
| BOMAG | 211/211A-AB-AD-B-D | F6L912 | | | | AB3535 | 0986B03535 | | | | |
| BOMAG | 212 DH-PD-SB | F6L912 | | | | AB3535 | 0986B03535 | | | | |
| BOMAG | 212 B-D | F6L912 | | | | AB3535 | 0986B03535 | | | | |
| BOMAG | 213 D- PD-PDB | BF6L913 | | P3001/1 | 0451403001 | | | | | | |
| BOMAG | 22 CA | BF6L913 | | P3001/1 | 0451403001 | | | | | | |
| BOMAG | 220 AD | BF6L913 | | P3001/1 | 0451403001 | | | | | | |
| BOMAG | 300 | BF6L913 | | P3001/1 | 0451403001 | | | | | | |
| BOMAG | 10-12-14-15 | Ford 220 Diesel | | OB1567 | 0986B01567 | | | | | | |
| BOMAG | 710 | CUMMINS LTA10 | | OB1011 | 0986B01011 | | | | | | |
| BOMAG | 710 | CUMMINS LTA10 | | | | | | | | | |
| BOMAG | 710 | CUMMINS LTA10 | | OB1043 | 0986B01043 | | | | | | |
| BOMAG | 45 | CUMMINS Turbo | | | | | | | | | |
| BOMAG | 350 P / 351 | CUMMINS | | | | | | | | | |
| BOMAG | 850 | CUMMINS | | | | | | | | | |
| CASE | | | | | | | | | | | |
| CASE | 180 | 6T-830 | | | | | | DB0713 | 0986450713 | | |
| CASE | 200 | 6TA-830 | | | | | | DB0713 | 0986450713 | | |
| CASE | 200 | 6T-830 | | | | | | DB0713 | 0986450713 | | |
| CASE | 220 | 6TA-830 | | | | | | DB0713 | 0986450713 | | |
| CASE | 220 | 6T-830 | | | | | | DB0713 | 0986450713 | | |
| CASE | 240 | 6TA-830 | | | | | | DB0713 | 0986450713 | | |
| CASE | 240 | 6T-830 | | | | | | DB0713 | 0986450713 | | |

| MARCA | VEHÍCULO | MOTOR | FECHA | SC | ACEITE | SC | AIRE | SC | COMBUSTIBLE | SC | HABITÁCULO |
|---|---|---|---|---|---|---|---|---|---|---|---|
| CASE | 270 | 6TA-830 | | | | | | DB0713 | 0986450713 | | |
| CASE | 660 | MWMD222/3 | | | | | | DB0696 | 0986450696 | | |
| CASE | 2388 | Cummins6CTAA8.3 | | | | | | DB0519 | 0986450519 | | |
| CASE | 2388 | Cummins6CTAA8.3 | | | | | | DB0713 | 0986450713 | | |
| CASE | 2399 | Cummins6CTAA8.3 | | | | | | DB0519 | 0986450519 | | |
| CASE | 2399 | 6CTAA8.3 | | | | | | DB0713 | 0986450713 | | |
| CASE | 2470 | ScaniaD11 | | | | | | DB0519 | 0986450519 | | |
| CASE | 4490 | ScaniaD11 | | | | | | DB0519 | 0986450519 | | |
| CASE | 7210 | 6T-830 | | | | | | DB0713 | 0986450713 | | |
| CASE | 7220 | 6T-830 | | | | | | DB0713 | 0986450713 | | |
| CASE | 7230 | 6TA-830 | | | | | | DB0713 | 0986450713 | | |
| CASE | 7240 | 6TA-830 | | | | | | DB0713 | 0986450713 | | |
| CASE | 7250 | 6TA-830 | | | | | | DB0713 | 0986450713 | | |
| CASE | 9150 | CATERPILLAR3306 | | | | | | DB0718 | 0986450718 | | |
| CASE | 9330 | 6CTA8.3 | | | | | | DB0713 | 0986450713 | | |
| CASE | 9350 | CUMMINS | | OB1011 | 0986B01011 | | | DB0581 | 0986450581 | | |
| CASE | 1150 G | 6T-590 | | | | | | DB0713 | 0986450713 | | |
| CASE | 125 B / 170 B | DeutzBF6L913 | | | | | | DB0519 | 0986450519 | | |
| CASE | 580 - 580 CK - 580 E | PERKINS4-203 | | | | | | DB0695 | 0986450695 | | |
| CASE | 580 E | CASE188-D | | | | | | DB0695 | 0986450695 | | |
| CASE | 580 H | PERKINS4-236 | | | | | | DB0695 | 0986450695 | | |
| CASE | 580-580CK-580E | Perkins4-203 | | | 0986B01567 | | | | | | |
| CASE | 584E/585E/586E | Perkins4-390 | | | | | | DB0519 | 0986450519 | | |
| CASE | 7230/7240/7250 | 6TA-830 | | | | | | | | | |
| CASE | 850 G | 6T-590 | | | | | | DB0713 | 0986450713 | | |
| CASE | 9170-9180 | CUMMINS | | OB1011 | 0986B01011 | | | | | | |
| CASE | CA - CU | CUMMINS-CATERPILLAR | | | | | | DB0581 | 0986450581 | | |
| CASE | CM 280 - 325 - 360 | | | | | | | DB0581 | 0986450581 | | |
| CASE | CS 280 - 325 - 360 | | | | | | | DB0581 | 0986450581 | | |
| CASE | CX 50 - CX 60 | PERKINSG2.7-2.7T | | | | | | DB0695 | 0986450695 | | |
| CASE | CX 70 | PERKINSG4.2 | | | | | | DB0695 | 0986450695 | | |
| CASE | CX 80 - CX90 - CX 100 | PERKINSG4.0T | | | | | | DB0695 | 0986450695 | | |
| CASE | KM 225 - 280 - 325 - 360 | | | | | | | DB0581 | 0986450581 | | |
| CASE | KS 280 - 325 - 360 | | | | | | | DB0581 | 0986450581 | | |
| CASE | MAXXUM MX 90 | CUMMINS4CTA3.9 | | OB1010 | 0986B01010 | | | | | | |
| CASE | PANTHER - LION 1000 | CUMMINSNT855 | | | | | | DB0581 | 0986450581 | | |
| CASE | PT 350 | | | | | | | DB0581 | 0986450581 | | |
| CASE | PTA 251 - 280 - 296 - 297 - 310 - 325 | | | | | | | DB0581 | 0986450581 | | |
| CASE | Quadtrac | | | OB1011 | 0986B01011 | | | | | | |

| MARCA | VEHÍCULO | MOTOR | FECHA | SC | ACEITE | SC | AIRE | SC | COMBUSTIBLE | SC | HABITÁCULO |
|---|---|---|---|---|---|---|---|---|---|---|---|
| CASE | ST 280 | CUMMINS-CATERPILLAR | | | | | | DB0581 | 0986450581 | | |
| CASE | ST 310 - 320 - 350 | | | | | | | DB0581 | 0986450581 | | |
| CASE | ST 450 | CUMMINS-CATERPILLAR | | | | | | DB0581 | 0986450581 | | |
| CASE | W20E | CUMMINS 5.9B | | | | | | DB0519 | 0986450519 | | |
| CASE | W36 | Scania D11 | | | | | | DB0519 | 0986450519 | | |
| CASE | Cosechadoras | | | | | | | | | | |
| CASE | 600/660 | CASE | | OB3325 | 0451103325 | | | DB0200 | 0986BF0200 | | |
| CASE | 660 | MWM D222/3 | | | | | | DB0696 | 0986450696 | | |
| CASE | 660 | MWM D225/6 | | OB1027 | 0986B01027 | | | DB0200 | 0986BF0200 | | |
| CASE | 580 - 580 CK - 580 E | PERKINS 4-203 | | OB1567 | 0986B01567 | | | DB0695 | 0986450695 | | |
| CASE | 580 E | CASE 188-D | | OB3325 | 0451103325 | | | DB0695 | 0986450695 | | |
| CASE | 580 H | PERKINS 4-236 | | OB3325 | 0451103325 | | | DB0695 (P) | 0986450695 | | |
| CASE | | | | | | | | DB0695 (S) | 0986450695 | | |
| CASE | 2344 | | | OB1008 | 0986B01008 | | | DB0719 | 0986450719 | | |
| CASE | 2366 - 2388 | | | | | | | DB0719 | 0986450719 | | |
| CASE | | | | | | | | RB0583 | 0986450583 | | |
| CASE | Maquinaria Agrícolas | | | | | | | | | | |
| CASE | CA - CU | CUMMINS-CATERPILLAR | | | | | | RB0581 (SR) | 0986450581 | | |
| CASE | | | | | | | | RB0583 | 0986450583 | | |
| CASE | CS 280 - 325 - 360 | | | | | | | RB0581 (SR) | 0986450581 | | |
| CASE | | | | | | | | RB0583 | 0986450583 | | |
| CASE | CM 280 - 325 - 360 | | | | | | | RB0581 (SR) | 0986450581 | | |
| CASE | | | | | | | | RB0583 | 0986450583 | | |
| CASE | PT 350 | | | | | | | RB0581 (SR) | 0986450581 | | |
| CASE | | | | | | | | RB0583 | 0986450583 | | |
| CASE | PTA 251 - 280 - 296 - 297 - 310 - 325 | | | | | | | RB0581 (SR) | 0986450581 | | |
| CASE | | | | | | | | RB0583 | 0986450583 | | |
| CASE | KM 225 - 280 - 325 - 360 | | | | | | | RB0581 (SR) | 0986450581 | | |
| CASE | | | | | | | | RB0583 | 0986450583 | | |
| CASE | KR 1280 | | | | | | | RB0583 | 0986450583 | | |
| CASE | KS 280 - 325 - 360 | | | | | | | RB0581 (SR) | 0986450581 | | |
| CASE | | | | | | | | RB0583 | 0986450583 | | |
| CASE | PANTHER - LION 1000 | CUMMINS NT855 | | | | | | RB0581 (SR) | 0986450581 | | |
| CASE | | | | | | | | RB0583 | 0986450583 | | |
| CASE | PANTHER II ST310 - ST 220 | | | | | | | RB0583 | 0986450583 | | |
| CASE | | | | | | | | | | | |
| CASE | QUADTRAC | | | OB1011 | 0986B01011 | | | RB0583 | 0986450583 | | |
| CASE | ST 251 | | | | | | | | | | |
| CASE | | | | | | | | | | | |

| MARCA | VEHÍCULO | MOTOR | FECHA | SC | ACEITE | SC | AIRE | SC | COMBUSTIBLE | SC | HABITÁCULO |
|---|---|---|---|---|---|---|---|---|---|---|---|
| CASE | ST 280 | CUMMINS-CATERPILLAR | | | | | | RB0581(SR) | 0986450581 | | |
| CASE | | | | | | | | RB0583 | 0986450583 | | |
| CASE | ST 310 - 320 - 350 | | | | | | | RB0581(SR) | 0986450581 | | |
| CASE | | | | | | | | RB0583 | 0986450583 | | |
| CASE | ST 320 TIGER - TURBO TIGER | | | | | | | RB0583 | 0986450583 | | |
| CASE | | | | | | | | | | | |
| CASE | ST 450 | CUMMINS-CATERPILLAR | | | | | | RB0581(SR) | 0986450581 | | |
| CASE | | | | | | | | RB0583 | 0986450583 | | |
| CASE | 9150 | CUMMINS | | | | | | RB0583 | 0986450583 | | |
| CASE | 9150 | CATERPILLAR3306 | | | | | | DB0718 | 0986450718 | | |
| CASE | | | | | | | | RB0581(SR) | 0986450581 | | |
| CASE | | | | | | | | RB0583 | 0986450583 | | |
| CASE | 9170 - 9180 | CATERPILLAR 3406 | | | | | | RB0583 | 0986450583 | | |
| CASE | 9170 - 9180 - 9190 | CUMMINS | | OB1011 | 0986B01011 | | | RB0583 | 0986450583 | | |
| CASE | 9330 | CUMMINS6CTA8.3 | | | | | | DB0713 | 0986450713 | | |
| CASE | | | | | | | | RB0583 | 0986450583 | | |
| CASE | 9350 | CUMMINS | | OB1011 | 0986B01011 | | | RB0581(SR) | 0986450581 | | |
| CASE | | | | | | | | RB0583 | 0986450583 | | |
| CASE | Tractores | | | | | | | | | | |
| CASE | C 80/2 - C 80/4 | PERKINS | | OB1028 | 0986B01028 | | | | | | |
| CASE | CX 50 - CX 60 | PERKINSG2.7-2.7T | 01-98 => 05-01 | OB3325 | 0451103325 | | | DB0695 | 0986450695 | | |
| CASE | CX 70 | PERKINSG4.2 | 01-98 => 05-01 | OB1028 | 0986B01028 | | | DB0695 | 0986450695 | | |
| CASE | CX 80 - CX90 - CX 100 | PERKINSG4.0T | 01-98 => 05-01 | OB1028 | 0986B01028 | | | DB0695 | 0986450695 | | |
| CASE | | | | | | | | DB0732 | 0986450732 | | |
| CASE | MX 80 C - MX 90 C - MX 100 C | PERKINS1004-40T/40TW | 01-99 => 05-01 | OB1028 | 0986B01028 | | | DB0732 | 0986450732 | | |
| CASE | MX 115 C | PERKINS1006-60T | 01-99 => 05-01 | OB1028 | 0986B01028 | | | DB0732 | 0986450732 | | |
| CASE | MAGNUM MX 180 - MX 200 - MX 220 - MX 240 | CUMMINS6CT8.3 | 00 => | | | | | DB0713 | 0986450713 | | |
| CASE | | | | | | | | RB0583 | 0986450583 | | |
| CASE | MAGNUM MX 200 - MX 220 - MX 240 - MX 270 | CUMMINS6CTA8.3 | 00 => | | | | | DB0519 | 0986450519 | | |
| CASE | | | | | | | | DB0713 | 0986450713 | | |
| CASE | | | | | | | | RB0583 | 0986450583 | | |
| CASE | MAGNUM 7210 - 7220 | CUMMINS6CT8.3 | | | | | | DB0519 | 0986450519 | | |
| CASE | | | | | | | | DB0713 | 0986450713 | | |
| CASE | | | | | | | | RB0583 | 0986450583 | | |
| CASE | MAGNUM 7230 - 7240 - 7250 | CUMMINS6CTA8.3 | | | | | | DB0519 | 0986450519 | | |
| CASE | | | | | | | | DB0713 | 0986450713 | | |
| CASE | | | | | | | | RB0583 | 0986450583 | | |
| CASE | MAXXUM MX 90 | CUMMINS4CTA3.9 | | OB1010 | 0986B01010 | | | DB0732 | 0986450732 | | |
| CASE | MAXXUM MX 100 - 110 - 120 - 135 - 150 - 170 | CUMMINS6CT5.9 | | OB1008 | 0986B01008 | | | | | | |

| MARCA | VEHÍCULO | MOTOR | FECHA | SC | ACEITE | SC | AIRE | SC | COMBUSTIBLE | SC | HABITÁCULO |
|---|---|---|---|---|---|---|---|---|---|---|---|
| CASE | 2470 | SCANIAD11 | | OB0014 | 0986B00014 | | | DB0519(P) | 0986450519 | | |
| CASE | | | | | | | | DB0519(S) | 0986450519 | | |
| CASE | 2500 | DETROITD4-53N | | | | | | | | | |
| CASE | | | | | | | | | | | |
| CASE | 4490 | SCANIAD11 | | | | | | DB0519 | 0986450519 | | |
| CASE | | | | | | | | DB0519 | 0986450519 | | |
| CASE | 4490 | SCANIAD11 | | OB0014 | 0986B00014 | | | DB0519(P) | 0986450519 | | |
| CHERY | | | | | | | | | | | |
| CHERY | Tiggo 2.0 | SQR484F | 08.08 => | OB0006 | 0986B00006 | | | GB0018 | 0986BF0018 | | |
| CHERY | Skin 1.6 | SQR481 | 07.10 => | OB0510 | 0986B00510 | | | | | | |
| CHEVROLET | | | | | | | | | | | |
| CHEVROLET | Agile 1.4 | X14YX | 09.09 => | OB0021 | 0986B00021 | AB2313 | 0986B02313 | GB0018 | 0986BF0018 | CB0501 | 0986BF0501 |
| CHEVROLET | Astra | 1.7 TurboDiesel | => 99 | P3297 | 0451103297 | S3007 | 1457433007 | DB0732 | 0986450732 | CB0501 | 0986BF0501 |
| CHEVROLET | Astra I 1.8i 8v | 1.8i8v | 01.00 => 01.02 | OB0021 | 0986B00021 | AB3513 | 1457433513 | GB0018 | 0986BF0018 | CB0511 | 0986BF0511 |
| CHEVROLET | Astra I | 2.08v-2.016v | 01.98 => 01.02 | OB0021 | 0986B00021 | AB3513 | 1457433513 | GB0018 | 0986BF0018 | CB0511 | 0986BF0511 |
| CHEVROLET | Astra II | 2.08v-2.016v | 01.02 => | OB0021 | 0986B00021 | AB3513 | 1457433513 | GB0018 | 0986BF0018 | CB0511 | 0986BF0511 |
| CHEVROLET | Astra II | 2.08v-2.016v | 04.04 => | OB0021 | 0986B00021 | AB3513 | 1457433513 | GB0018 | 0986BF0018 | CB0511 | 0986BF0511 |
| CHEVROLET | Astra I - II 2.0 16v Turbo Diesel | | 12.98 => | P7002 | 1457437002 | AB3513 | 1457433513 | N9656 | 1457429656 | CB0525 | 0986BF0525 |
| CHEVROLET | | | | | | | | | | | |
| CHEVROLET | Astra II | 2.416v | 01.05 => | OB0021 | 0986B00021 | AB3513 | 1457433513 | GB0018 | 0986BF0018 | CB0511 | 0986BF0511 |
| CHEVROLET | Aveo 1.6 16v | F16D | 12.08 => | OB0021 | 0986B00021 | AB2517 | 0986B02517 | F5969 | 0450905969 | | |
| CHEVROLET | | | | | | | | | | | |
| CHEVROLET | Blazer | 2.2i 8v | => 01.97 | OB0021 | 0986B00021 | AB2317 | 0986B02317 | GB0238 | 0986450238 | | |
| CHEVROLET | Blazer | 2.2iMPFI | 01.98 => 01.00 | OB0021 | 0986B00021 | AB2286(P) | 1457432286 | GB0018 | 0986BF0018 | | |
| CHEVROLET | | | | | | | | | | | |
| CHEVROLET | Blazer | Maxion 2.5 TurboDiesel | 01.97 => 01.00 | OB1026 | 0986B01026 | AB3526(P) | 0986B03526 | DB0732 | 0986450732 | | |
| CHEVROLET | | | | | | AB3902(S) | 0986B03902 | | | | |
| CHEVROLET | Blazer | MWM 2.8 TurboDiesel | 01.02 => | OB1016 | 0986B01016 | AB2286(P) | 1457432286 | DB0308 | 0986BF0308 | | |
| CHEVROLET | | | | | | | | | | | |
| CHEVROLET | Blazer | MWM 2.8 TurboDiesel | => 01.01 | OB1016 | 0986B01016 | AB2286(P) | 1457432286 | DB0851 | 0986450851 | | |
| CHEVROLET | | | | | | | | | | | |
| CHEVROLET | Blazer Executive | 4.3iV6 | 01.97 => | | | AB2317 | 0986B02317 | | | | |
| CHEVROLET | Captiva | 2.0LTDSUV/AWD Z20DMH | 11.07 => | P7071 | F026407071 | | | N0001 | 1457070001 | | |
| CHEVROLET | Captiva | 2.416VZ24XE | 11.07 => | OB0021 | 0986B00021 | | | | | | |
| CHEVROLET | | | | P7071 | F026407071 | | | | | | |
| CHEVROLET | Captiva | 2.2Vcdi Z22D | 11.11 => | | | | | DB0249 | 0986BF0249 | | |
| CHEVROLET | Cobalt | 1.8 8v (BK) | 03.13 => | OB0021 | 0986B00021 | AB2037 | 0986B02037 | GB0018 | 0986BF0018 | CB0587 | 0986BF0587 |
| CHEVROLET | Cobalt | 1.3CDTI(Z13DT) | 03.13 => | | | AB2037 | 0986B02037 | | | CB0587 | 0986BF0587 |
| CHEVROLET | Corsa I | 1.0MPFI (C10NE) | 01.00 => 01.02 | OB0021 | 0986B00021 | AB2313 | 0986B02313 | GB0018 | 0986BF0018 | CB0501 | 0986BF0501 |

| MARCA | VEHÍCULO | MOTOR | FECHA | SC | ACEITE | SC | AIRE | SC | COMBUSTIBLE | SC | HABITÁCULO |
|---|---|---|---|---|---|---|---|---|---|---|---|
| CHEVROLET | Corsa I | 1.4EFI | 06.94 => 12.96 | OB0021 | 0986B00021 | AB2313 | 0986B02313 | GB0018 | 0986BF0018 | CB0501 | 0986BF0501 |
| CHEVROLET | Corsa I | 1.6i8v-1.6i16v | 01.97 => 09.01 | OB0021 | 0986B00021 | AB2313 | 0986B02313 | GB0018 | 0986BF0018 | CB0501 | 0986BF0501 |
| CHEVROLET | Corsa I | 1.7 8VDiesel-c/aireacond. | | OB0015 | 0986B00015 | AB2334 | 0986B02334 | DB0732 | 0986450732 | CB0501 | 0986BF0501 |
| CHEVROLET | Corsa I | 1.7Diesel-s/aireacond. | | OB0015 | 0986B00015 | | | DB0732 | 0986450732 | | |
| CHEVROLET | Corsa II | 1.7 16vTurboDiesel | 04.02 => | P9199 | 1457429199 | AB2328 | 0986B02328 | N9656 | 1457429656 | CB0545 | 0986BF0545 |
| CHEVROLET | Corsa II | 1.8i 8v(CE18NE) | 01.02 => | OB0021 | 0986B00021 | AB2328 | 0986B02328 | GB0018 | 0986BF0018 | CB0545 | 0986BF0545 |
| CHEVROLET | | | | | | AB2313 | 0986B02313 | | | | |
| CHEVROLET | Corsa Classic | 1.4(X14Y) | 01.09 => | OB0021 | 0986B00021 | AB2313 | 0986B02313 | GB0018 | 0986BF0018 | CB0501 | 0986BF0501 |
| CHEVROLET | Celta | 1.4 8V LS-LT | 06.11 = > | OB0021 | 0986B00021 | AB2314 | 0986B02314 | GB0018 | 0986BF0018 | CB0501 | 0986BF0501 |
| CHEVROLET | Cruze | 1.8 16V(F18D4/18XER) | 07.10 = > | P7006 | F026407006 | AB2507 | 0986B02507 | | | CB0587 | 0986BF0587 |
| CHEVROLET | Cruze | 2.0VCDi(Z20DMH) | 10.10 => | P7071 | F026407071 | | | N2062 | F026402062 | CB0587 | 0986BF0587 |
| CHEVROLET | Grand Blazer | Maxion2.5TurboDiesel | 01.97 => 01.00 | OB1026 | 0986B01026 | AB3526(P) | 0986B03526 | DB0732 | 0986450732 | | |
| CHEVROLET | | | | | | AB3902(S) | 0986B03902 | | | | |
| CHEVROLET | Grand Blazer | MWM4.2TurboDiesel | | OB1027 | 0986B01027 | AB9606 | 1987429606 | DB0732 | 0986450732 | | |
| CHEVROLET | | | | | | | | DB0710(BoxSA) | 0986450710 | | |
| CHEVROLET | | | | | | | | DB0219(Elem.SA) | 0986BF0219 | | |
| CHEVROLET | Grand Vitara | 2.0i16v | 99 => 01 | OB0028 | 0986B00028 | S3956 | 1457433956 | | | | |
| CHEVROLET | Grand Vitara | 2.0TurboDiesel | 99 => 01 | P2064 | 0986452064 | S3956 | 1457433956 | | | | |
| CHEVROLET | Ipanema | 1.8i | => 01.98 | OB0021 | 0986B00021 | AB2017 | 0986B02017 | GB0238 | 0986450238 | | |
| CHEVROLET | Ipanema | 2.0iMPFI | 01.96 => 01.98 | OB0021 | 0986B00021 | AB2316 | 0986B02316 | GB0234 | 0986450234 | | |
| CHEVROLET | Kadett | 1.8i | => 01.97 | OB0021 | 0986B00021 | AB2017 | 0986B02017 | GB0238 | 0986450238 | | |
| CHEVROLET | Kadett | 2.0iMPFI | 01.96 => 01.98 | OB0021 | 0986B00021 | AB2316 | 0986B02316 | GB0234 | 0986450234 | | |
| CHEVROLET | Meriva | 1.7 16vTurboDiesel | 11.03 => | P9199 | 1457429199 | AB2328 | 0986B02328 | N9656 | 1457429656 | CB0714/M2111(carb.Act) | 0986BF0714o 1987432111 |
| CHEVROLET | Meriva | 1.8v//16v | 11.03 => | OB0021 | 0986B00021 | AB2328 | 0986B02328 | GB0018 | 0986BF0018 | CB0714/M2111(carb.Act) | 0986BF0714o 1987432111 |
| CHEVROLET | Monza | 2.0iMPFI | => 01.97 | OB0021 | 0986B00021 | | | GB0234 | 0986450234 | | |
| CHEVROLET | Monza | 1.8i-2.0iEFI | => 01.96 | OB0021 | 0986B00021 | AB2017 | 0986B02017 | GB0238 | 0986450238 | | |
| CHEVROLET | Onix | 1.4(C14SE) | 04.13 => | OB0021 | 0986B00021 | AB2530 | 0986B02530 | GB0018 | 0986BF0018 | CB0587 | 0986BF0587 |
| CHEVROLET | Omega | 2.2i | | OB0021 | 0986B00021 | AB2316 | 0986B02316 | GB0240 | 0986450240 | | |
| CHEVROLET | Omega | 4.1i | 10.94 => 12.98 | | | AB2316 | 0986B02316 | GB0234 | 0986450234 | | |
| CHEVROLET | Prisma | 1.4 8V(LS-LT) | 08.11 = > | OB0021 | 0986B00021 | AB2314 | 0986B02314 | GB0018 | 0986BF0018 | CB0501 | 0986BF0501 |
| CHEVROLET | Prisma II | 1.4(C14SE) | 04.13 => | OB0021 | 0986B00021 | AB2530 | 0986B02530 | | | CB0587 | 0986BF0587 |
| CHEVROLET | Spark | 1.0S-TEC | 08.08 => | P2058 | 0986452058 | AB2508 | 0986B02508 | F5969 | 0450905969 | M2171 | 1987432171 |
| CHEVROLET | Spark | 1.2S-TEC | 04.11 => | | | | | F5969 | 0450905969 | | |
| CHEVROLET | Spin | 1.8v(BK) | 10.12 => | OB0021 | 0986B00021 | AB2037 | 0986B02037 | GB0018 | 0986BF0018 | CB0587 | 0986BF0587 |
| CHEVROLET | Spin | 1.3CDTI(Z13DT) | 03.13 => | | | AB2037 | 0986B02037 | | | CB0587 | 0986BF0587 |
| CHEVROLET | Sonic | 1.6 16v(F16D) | 02.12 => | P7006 | F026407006 | AB2037 | 0986B02037 | | | CB0587 | 0986BF0587 |
| CHEVROLET | Suprema | 2.2i | | OB0021 | 0986B00021 | AB2316 | 0986B02316 | GB0240 | 0986450240 | | |
| CHEVROLET | Tigra | 1.6i16v | | OB0021 | 0986B00021 | AB2313 | 0986B02313 | GB0018 | 0986BF0018 | CB0501 | 0986BF0501 |
| CHEVROLET | Tracker | 1.8i16v(F18D4/18XER) | 08.13 => | P7006 | F026407006 | AB2538 | 0986B02538 | | | CB0587 | 0986BF0587 |

| MARCA | VEHÍCULO | MOTOR | FECHA | SC | ACEITE | SC | AIRE | SC | COMBUSTIBLE | SC | HABITÁCULO |
|---|---|---|---|---|---|---|---|---|---|---|---|
| CHEVROLET | Vectra | 1.7 Diesel | => 95 | | | | | DB0732 | 0986450732 | | |
| CHEVROLET | Vectra | 2.0i | => 09.96 | OB0021 | 0986B00021 | | | GB0240 | 0986450240 | | |
| CHEVROLET | Vectra | 2.0i 8v-2.0i 16v | 10.96 => | OB0021 | 0986B00021 | AB2318 | 0986B02318 | GB0018 | 0986BF0018 | CB0503 | 0986BF0503 |
| CHEVROLET | Vectra | 2.0 16v Turbo Diesel | 04.02 => | P7002 | 1457437002 | | | N9656 | 1457429656 | CB0545 | 0986BF0545 |
| CHEVROLET | Vectra | 2.0 16v Turbo Diesel | 12.98 => | P7002 | 1457437002 | S3771 | 1457433771 | N9656 | 1457429656 | CB0503 | 0986BF0503 |
| CHEVROLET | Vectra | 2.2i 16v | 10.96 => | OB0021 | 0986B00021 | AB2318 | 0986B02318 | GB0018 | 0986BF0018 | CB0503 | 0986BF0503 |
| CHEVROLET | Vectra | 2.2i 16v | 09-00 => 09-02 | | | S3771 | 1457433771 | | | | |
| CHEVROLET | Vectra | 2.4 16v X24SE | 10.06 => | | | AB3513 | 1457433513 | GB0018 | 0986BF0018 | CB0511 | 0986BF0511 |
| CHEVROLET | Zafira | 2.0i 8v-2.0i 16v | 03.04 => | OB0021 | 0986B00021 | AB3513 | 1457433513 | GB0018 | 0986BF0018 | CB0525 | 0986BF0525 |
| CHEVROLET | Zafira | 2.0i 8v-2.0i 16v | 01.00 => 01.04 | OB0021 | 0986B00021 | AB3513 | 1457433513 | GB0018 | 0986BF0018 | CB0525 | 0986BF0525 |
| CHEVROLET | | | | | | | | | | | |
| CHEVROLET | Utilitarios | | | | | | | | | | |
| CHEVROLET | | | | | | | | | | | |
| CHEVROLET | Avalanche | 5.3 V8 | | | | | | | | | |
| CHEVROLET | Combo | 1.6i | | OB0021 | 0986B00021 | AB2313 | 0986B02313 | GB0018 | 0986BF0018 | CB0501 | 0986BF0501 |
| CHEVROLET | Combo | 1.7 Diesel-c/aire acond. | | OB0015 | 0986B00015 | AB2334 | 0986B02334 | DB0732 | 0986450732 | CB0501 | 0986BF0501 |
| CHEVROLET | Combo | 1.7 Diesel-s/aire acond. | | OB0015 | 0986B00015 | | | DB0732 | 0986450732 | | |
| CHEVROLET | C 10 | 250 | | OB0026 | 0986B00026 | | | GB0008 | 0986BF0008 | | |
| CHEVROLET | C 10 | XD3P Diesel | | | | | | DB0211 | 0986BF0211 | | |
| CHEVROLET | C 10 | XD3P Turbo Diesel | | | | AB3511(P) | 0986B03511 | DB0211 | 0986BF0211 | | |
| CHEVROLET | C 20 | 250 | 01.92 => | OB0026 | 0986B00026 | AB3511(P) | 0986B03511 | GB0008 | 0986BF0008 | | |
| CHEVROLET | C 20 | 250 | 92 => | HB1652(DH) | 0986B01652 | AB3903(S) | 0986B03903 | | | | |
| CHEVROLET | C 20 | 4.1i MPFI | 01.96 => 12.96 | | | AB3511(P) | 0986B03511 | GB0234 | 0986450234 | | |
| CHEVROLET | D 20 | Maxion S4 2.5 | | OB1025 | 0986B01025 | AB3511(P) | 0986B03511 | DB0694 | 0986450694 | | |
| CHEVROLET | D 20 | Maxion S4 2.5 | | HB1652(DH) | 0986B01652 | AB3903(S) | 0986B03903 | | | | |
| CHEVROLET | D 20 Turbo | Maxion S4T 2.5 | | OB1025 | 0986B01025 | AB3511(P) | 0986B03511 | DB0732 | 0986450732 | | |
| CHEVROLET | D 20 Turbo | Maxion S4T 2.5 | | HB1652(DH) | 0986B01652 | AB3903(S) | 0986B03903 | | | | |
| CHEVROLET | LUV | Isuzu 2.3i | | OB2354 | 0986452354 | | | | | | |
| CHEVROLET | LUV | Isuzu 2.5i | | OB2354 | 0986452354 | | | | | | |
| CHEVROLET | LUV | Nissan 2.5 Diesel | | | | AB3553 | 0986B03553 | | | | Nolleva |
| CHEVROLET | LUV | Isuzu 2.5 Turbo Diesel (4JA1) | 99 => | OB0510 | 0986B00510 | AB3553 | 0986B03553 | | | | Nolleva |
| CHEVROLET | LUV | Isuzu 2.8 Turbo Diesel | 99 => | | | | | DB0851 | 0986450851 | | |
| CHEVROLET | S 10 | 2.2i EFI | => 01.96 | OB0021 | 0986B00021 | AB2317 | 0986B02317 | GB0238 | 0986450238 | | |
| CHEVROLET | S 10 | 4.3i V6 | 01.96 => | | | AB2317 | 0986B02317 | | | | |
| CHEVROLET | S 10 | 2.2i MPFI | => 01.97 | OB0021 | 0986B00021 | AB2286(P) | 1457432286 | GB0018 | 0986BF0018 | | |
| CHEVROLET | S 10 | 2.5 Maxion Turbo Diesel | => 01.97 | OB1026 | 0986B01026 | AB3526(P) | 0986B03526 | DB0732 | 0986450732 | | |
| CHEVROLET | | | | | | AB3902(S) | 0986B03902 | DB0306 | 0986BF0306 | | |
| CHEVROLET | S 10 | 2.5 Maxion Turbo Diesel | 01.98 => 01.00 | OB1026 | 0986B01026 | AB2318 | 0986B02318 | DB0732 | 0986450732 | | |
| CHEVROLET | S 10 (00') | 2.8 MWM Turbo Diesel | 01.01 =>02.05 | OB1016 | 0986B01016 | AB2286(P) | 1457432286 | DB0851 | 0986450851 | | |

| MARCA | VEHÍCULO | MOTOR | FECHA | SC | ACEITE | SC | AIRE | SC | COMBUSTIBLE | SC | HABITÁCULO |
|---|---|---|---|---|---|---|---|---|---|---|---|
| CHEVROLET | | | | | | | | | | | |
| CHEVROLET | S 10 | 2.8MWMTurboDiesel | 01.02 => | OB1016 | 0986B01016 | AB2286(P) | 1457432286 | DB0308 | 0986BF0308 | | |
| CHEVROLET | | | | | | | | | | | |
| CHEVROLET | S 10 (05') | 2.8TDIMWMSPRINT(4x4) | 03.05 => | OB1016 | 0986B01016 | AB2286(P) | 1457432286 | DB0308 | 0986BF0308 | | |
| CHEVROLET | | | | | | | | | | | |
| CHEVROLET | S 10 Electronica (05') | 2.8MWMSprint4.07TCE | 08.05 => | OB1016 | 0986B01016 | AB3002 | 0986B03002 | DB0405 | 0986BF0405 | | |
| CHEVROLET | | | | | | AB3400(S) | 0986B03400 | | | | |
| CHEVROLET | S-10 D/C-S/C (12') | 2.8CTDIDuramaxMWM(132-180) | 02.12 = > | OB0713 | 0986B00713 | AB3014 | 0986B03014 | DB0248 | 0986BF0248 | CB0657 | 0986BF0657 |
| CHEVROLET | Silverado | 2.8MWM | 01.01 => | OB1027 | 0986B01027 | AB2286(P) | 1457432286 | DB0710(BoxSA) | 0986450710 | | |
| CHEVROLET | | | | | | | | DB0219(Elem.SA) | 0986BF0219 | | |
| CHEVROLET | Silverado | 4.1MaxionS4Diesel | 97 => | OB1025 | 0986B01025 | AB9606 | 1987429606 | DB0732 | 0986450732 | | |
| CHEVROLET | Silverado | 4.1iMPFI | 01.98 => 12.99 | | | AB9606 | 1987429606 | GB0240 | 0986450240 | | |
| CHEVROLET | Silverado | 4.2MWM6.07Diesel | 01.97 => | OB1027 | 0986B01027 | AB9606 | 1987429606 | DB0732 | 0986450732 | | |
| CHEVROLET | | | | | | | | | | | |
| CHEVROLET | Silverado | 4.2MWM6.07TTurboDiesel | 01.00 => | OB1027 | 0986B01027 | AB3004(P) | 0986B03004 | DB0709(BoxSA) | 0986450709 | | Nolleva |
| CHEVROLET | | | | | | AB3402(S) | 0986B03402 | | | | |
| CHEVROLET | Trail Blazer | 2.8CTDIVM | 02.12 = > | | | AB3014 | 0986B03014 | | | CB0657 | 0986BF0657 |
| CHEVROLET | | | | | | | | | | | |
| CHEVROLET | Comerciales | | | | | | | | | | |
| CHEVROLET | | | | | | | | | | | |
| CHEVROLET | 6-100 | 2.5MaxionS4 | | OB1025 | 0986B01025 | AB9606(P) | 1987429606 | DB0732 | 0986450732 | | |
| CHEVROLET | 6-100 | 2.5MaxionS4 | | HB1652(DH) | 0986B01652 | | | DB0707(BoxSA) | 0986450707 | | |
| CHEVROLET | | | | | | | | DB0217(Elem.SA) | 0986BF0217 | | |
| CHEVROLET | 6-150 | 4.2MWMTurboDiesel | 01.98 => 01.01 | OB1027 | 0986B01027 | AB3526 | 0986B03526 | DB0400 | 0986BF0400 | | |
| CHEVROLET | 14-190 Kodiak | 6.6Caterpillar3116 | | OB1018(P) | 0986B01018 | | | | | | |
| CHEVROLET | | | | OB1015(S) | 0986B01015 | | | | | | |
| CHEVROLET | 15-190 | 6.6Caterpillar3116 | 99 => 01 | OB1018(P) | 0986B01018 | | | | | | |
| CHEVROLET | | | | OB1015(S) | 0986B01015 | | | | | | |
| CHEVROLET | 16-220 | 6.6Caterpillar3116 | 06-00 => | OB1018 | 0986B01018 | AB3537(P) | 0986B03537 | | | | |
| CHEVROLET | | | | | | | | DB0727(BoxSA) | 0986450727 | | |
| | | | | | | | | DB0223(Elem.SA) | 0986BF0223 | | |
| CHEVROLET | 16-220 | 6.6Caterpillar3116 | => 05.00 | OB1018(P) | 0986B01018 | AB3537(P) | 0986B03537 | | | | |
| CHEVROLET | | | | OB1015(S) | 0986B01015 | | | DB0734(BoxSA) | 0986450734 | | |
| CHEVROLET | D 6000 Turbo | MaxionS4T2.5 | => 99 | OB1025 | 0986B01025 | AB3511(P) | 0986B03511 | DB0732 | 0986450732 | | |
| CHEVROLET | D 6000 Turbo | MaxionS4T2.5 | | HB1652(DH) | 0986B01652 | AB3903(S) | 0986B03903 | | | | |
| CHEVROLET | 14000 | Perkins6.354 | => 00 | OB1028 | 0986B01028 | AB3535(P) | 0986B03535 | DB0695(P) | 0986450695 | | |
| CHEVROLET | 14000 | Perkins6.354 | | HB1652(DH) | 0986B01652 | AB3904(S) | 0986B03904 | | | | |
| CHEVROLET | NKR | 3.1Izusu | 99 => 01 | P2064 | 0986452064 | | | | | | |
| CHEVROLET | NPR | 4.3Izusu | => 01 | | | | | | | | |

| MARCA | VEHÍCULO | MOTOR | FECHA | SC | ACEITE | SC | AIRE | SC | COMBUSTIBLE | SC | HABITÁCULO |
|---|---|---|---|---|---|---|---|---|---|---|---|
| CHRYSLER | | | | | | | | | | | |
| CHRYSLER | 300 M | 3.5V6 24v | 99 => 02 | OB0014 | 0986B00014 | | | | | | |
| CHRYSLER | Caravan | 2.4i | | P3271 | 0451103271 | | | | | | |
| CHRYSLER | Caravan | 2.4i 16v | | P3271 | 0451103271 | | | | | | |
| CHRYSLER | Caravan | 2.5TD 16v | | P3258 | 0451103258 | | | | | | |
| CHRYSLER | Caravan | 3.0iv6 | | P3271 | 0451103271 | | | | | | |
| CHRYSLER | Caravan | 3.3iV6 | 01.94 => | OB0057 | 0986B00057 | | | | | | |
| CHRYSLER | Cherokee Sport | 2.4 16v | 03 => | P3271 | 0451103271 | | | | | | |
| CHRYSLER | Cherokee Classic | 2.5 Turbo Diesel | 93 => 97 | OB0014 | 0986B00014 | | | | | | |
| CHRYSLER | Cherokee Sport - Classic | 2.5 Turbo Diesel | 98 => 04 | P3258 | 0451103258 | | | | | | |
| CHRYSLER | Cherokee Sport CRD | 2.8 16v Turbo Diesel | 03 => | OB0018 | 0986B00018 | S9189 | 1987429189 | | | | |
| CHRYSLER | Cherokee Sport | 3.1 Turbo Diesel | 97 => 99 | OB0014 | 0986B00014 | | | | | | |
| CHRYSLER | Cherokee Limited | 3.7V6 | 02 => | OB0014 | 0986B00014 | | | | | | |
| CHRYSLER | Cherokee | 3.7iV6 | 09.03 => | OB3322 | 0451103322 | S9189 | 1987429189 | | | | |
| CHRYSLER | Cherokee Sport - Classic | 4.0i | 01.85=>09.00 | OB0057 | 0986B00057 | | | | | | |
| CHRYSLER | Crossfire | 3.2iV6 18v | | | | | | | | | |
| CHRYSLER | Dakota | 2.5 Turbo Diesel | 02.99=>02.05 | OB0057 | 0986B00057 | | | | | | |
| CHRYSLER | Dakota | 3.9i 12V | 07.93=>05.01 | OB0057 | 0986B00057 | | | | | | Nolleva |
| CHRYSLER | Ram | 2.5TDV8 | | | | AB9606 | 1987429606 | | | | |
| CHRYSLER | Ram 1500 | 3.9IV6-5.9iV8 | | OB0014 | 0986B00014 | S3272 | 1457433272 | | | | |
| CHRYSLER | Ram 2500 | 5.9TD 24v Cummins | 02.94=> | OB1008 | 0986B01008 | | | | | | |
| CHRYSLER | Grand Caravan | 2.5 Turbo Diesel | 98 => 01 | P3258 | 0451103258 | | | | | | |
| CHRYSLER | Grand Caravan | 3.0iv6 | => 97 | P3271 | 0451103271 | | | | | | |
| CHRYSLER | Grand Caravan | 3.3iV6 | | OB0057 | 0986B00057 | | | | | | |
| CHRYSLER | Grand Cherokee Laredo - Limited | 2.5 Turbo Diesel | | OB0014 | 0986B00014 | | | | | | |
| CHRYSLER | Grand Cherokee Laredo - Limited | 2.7 Turbo Diesel | 03 => | P70001 | 1457437001 | | | | | | |
| CHRYSLER | Grand Cherokee Laredo - Limited | 3.1 Turbo Diesel | 99 => 03 | OB0014 | 0986B00014 | | | | | | |
| CHRYSLER | Grand Cherokee Laredo | 4.0i | 91=>01 | OB0057 | 0986B00057 | | | | | | |
| CHRYSLER | Grand Cherokee Limited | 4.7i-5.2iV8 | 93 => | OB0014 | 0986B00014 | | | | | | |
| CHRYSLER | Grand Cherokee III 3.0 CRD V6 | OM642 | 06.05=> | P7008 | F026407008 | S9189 | 1987429189 | N2056 | F026402056 | | |
| CHRYSLER | Neon | 2.0i 16V-1.8i 16V | 3-96 => | P3271 | 0451103271 | | | | | | |
| CHRYSLER | PT Cruiser | 2.0 16v-2.4 16v | 00 => | P3271 | 0451103271 | S3338 | 1457433338 | | | | |
| CHRYSLER | PT. Cruiser 2.4 GT | EDV | 10.06 => | OB0003 | 0986B00003 | S3338 | 1457433338 | | | M2097 | 1987432097 |
| CHRYSLER | Sebring | 2.0 16v | 01 => 03 | P3271 | 0451103271 | | | | | | |
| CHRYSLER | Sebring | 2.7V6 24v | 01 => | | | | | | | | |
| CHRYSLER | Stratus | 2.0i | 04-97 => 01 | P3271 | 0451103271 | | | | | | |
| CHRYSLER | Stratus | 2.5iV6 | 04-97 => 01 | P3271 | 0451103271 | | | | | | |
| CHRYSLER | Viper | 8.3V10 | | | | | | | | | |
| CHRYSLER | Wrangler(93') | 4.0i(ERH) | 10.93=>03.02 | OB0057 | 0986B00057 | S9076 | 1457429076 | | | | |

| MARCA | VEHÍCULO | MOTOR | FECHA | SC | ACEITE | SC | AIRE | SC | COMBUSTIBLE | SC | HABITÁCULO |
|---|---|---|---|---|---|---|---|---|---|---|---|
| CITROEN | | | | | | | | | | | |
| CITROEN | 3CV - Furgoneta | 0.6 | | OB0032 | 0986B00032 | | | GB0008 | 0986BF0008 | | |
| CITROEN | Ami 8 - Elysse | 0.6 | | OB0032 | 0986B00032 | | | GB0008 | 0986BF0008 | | |
| CITROEN | AX | 1.4i | | OB0002 | 0986B00002 | S3227 | 1457433227 | GB0240 | 0986450240 | | |
| CITROEN | AX | 1.4Diesel | | OB0002 | 0986B00002 | AB2343 | 0986B02343 | DB0732 | 0986450732 | | |
| CITROEN | AX | 1.4i | | OB0002 | 0986B00002 | S3227 | 1457433227 | GB0240 | 0986450240 | | |
| CITROEN | Berlingo | 1.4iKFX TU3JP | 03 => | P9193 | 1457429193 | S3769 | 1457433769 | "GB0024/F2161" | 0986BF0024/0450902161 | CB0576 | 0986BF0576 |
| CITROEN | | | | OB0002 | 0986B00002 | | | | | | |
| CITROEN | Berlingo | 1.6i 16vNFUTU5JP4 | 10.00 => | OB0705 | 0986B00705 | S3325 | 1457433325 | "GB0024/F2161" | 0986BF0024/0450902161 | CB0576 | 0986BF0576 |
| CITROEN | Berlingo | 1.8i | 01 => | OB0002 | 0986B00002 | AB2343 | 0986B02343 | "GB0024/F2161" | 0986BF0024/0450902161 | CB0576 | 0986BF0576 |
| CITROEN | Berlingo | 1.8i | => 00 | OB0002 | 0986B00002 | AB2343 | 0986B02343 | "GB0024/F2161" | 0986BF0024/0450902161 | | |
| CITROEN | Berlingo | 1.9DieselXUD9A | 05.98 => | OB0002 | 0986B00002 | AB2025 | 0986B02025 | "DB0204/DB0207" | 0986BF0204/0986BF0207 | | |
| CITROEN | Berlingo | 1.9DieselDW8 | 98 => 00 | OB0002 | 0986B00002 | AB2026 | 0986B02026 | DB0207 | 0986BF0207 | CB0576 | 0986BF0576 |
| CITROEN | Berlingo | 2.0HDIDW10TD | 11.02 => | OB0002 | 0986B00002 | S3555 | 1457433555 | DB0423 DB0209 | 0986BF0423/0986BF0209 | CB0576 | 0986BF0576 |
| CITROEN | Berlingo | 2.0HDI 90RHYDW10TD | 11.02 => | OB0002 | 0986B00002 | S3555 | 1457433555 | DB0423 DB0209 | 0986BF0423/0986BF0209 | CB0576 | 0986BF0576 |
| CITROEN | Berlingo II | 1.6HDIDV6ATED4(66KW/90CV) | 04.10 => | OB0711 | 0986B00711 | AB2505 | 0986B02505 | N7006 | 0450907006 | CB0656 | 0986BF0656 |
| CITROEN | Berlingo II | 1.6HDIFAPDV6DTED4 | 04.10 => | OB0711 | 0986B00711 | AB2505 | 0986B02505 | N2862 | F026402862 | CB0656 | 0986BF0656 |
| CITROEN | Berlingo II | 1.6 16vTU5JPA | 04.10 => | OB0705 | 0986B00705 | AB2518 | 0986B02518 | N2862 | F026402862 | CB0656 | 0986BF0656 |
| CITROEN | BX | 1.9Diesel | | OB0002 | 0986B00002 | AB2343 | 0986B02343 | DB0694 | 0986450694 | | |
| CITROEN | BX | 1.9i-1.9i16v | | OB0002 | 0986B00002 | AB2343 | 0986B02343 | GB0240 | 0986450240 | | |
| CITROEN | Cactus | 1.2EP2DTPuretech | 06.17 => | OB0002 | 0986B00002 | | | GB0024 | 0986BF0024 | CB0546 | 0986BF0546 |
| CITROEN | C 15 | 1.8Diesel | | OB0002 | 0986B00002 | AB2025 | 0986B02025 | DB0204 | 0986BF0204 | | |
| CITROEN | C 3 | 1.4i 8v | 01.06 => | P9193/OB0705 | 1457429193/0986B00705 | "S3158/AB2518" | 1457433158/0986B02518 | "GB0024/F2161" | 0986BF0024/0450902161 | CB0546 | 0986BF0546 |
| CITROEN | C 3 | 1.4KFV/KFX TU3JP | 07.03 => | P9193 | 1457429193 | "S3158/AB2518" | 1457433158/0986B02518 | "GB0024/F2161" | 0986BF0024/0450902161 | CB0546 | 0986BF0546 |
| CITROEN | C3 | 1.4HDI DV4TD | 07.03 => | OB0711 | 0986B00711 | AB2503 | 0986B02503 | N6460 | 0450906460 | CB0546 | 0986BF0546 |
| CITROEN | C 3 | 1.6 16vNFUTU5JP4 | 09.01 => 07.03 | P9193 | 1457429193 | S3325 | 1457433325 | "GB0024/F2161" | 0986BF0024/0450902161 | CB0546 | 0986BF0546 |
| CITROEN | C 3 | 1.6i 16vXTR | 03.06 => | P9193/OB0705 | 1457429193/0986B00705 | S3325 | 1457433325 | "GB0024/F2161" | 0986BF0024/0450902161 | CB0546 | 0986BF0546 |
| CITROEN | C 3 Aircross | 1.6 16v | 10.10 => | OB0705 | 0986B00705 | AB2518 | 0986B02518 | | | | |
| CITROEN | C3 II | 1.5i(TU4) | 11.12 => | OB0705 | 0986B00705 | AB2515 | 0986B02515 | "GB0024/F2161" | 0986BF0024/0450902161 | CB0656 | 0986BF0656 |
| CITROEN | C3 II | 1.6Vti(EC5) | 11.12 => | OB0705 | 0986B00705 | AB2518 | 0986B02518 | "GB0024/F2161" | 0986BF0024/0450902161 | M2136 | 1987432136 |
| CITROEN | C3 Picasso | 1.5i(TU4) | 06.13 => | OB0705 | 0986B00705 | AB2515 | 0986B02515 | GB0024 | 0986BF0024 | CB0656 | 0986BF0656 |
| CITROEN | C 4 1.6 16 v | TU5JP4 | 01.07 => | OB0705 | 0986B00705 | AB2354 | 0986B02354 | "GB0024/F2161" | 0986BF0024/0450902161 | CB0546 | 0986BF0546 |
| CITROEN | C 4 1.6 HDI 110 | DV6TED4 | 03.10 =>12.10 | OB0711 | 0986B00711 | AB2505 | 0986B02505 | N2862 | F026402862 | CB0546 | 0986BF0546 |
| CITROEN | C 4 2.0 16 v | EW10J4(RFN) | 01.07 => | OB0705 | 0986B00705 | AB2369 | 0986B02369 | "GB0024/F2161" | 0986BF0024/0450902161 | CB0546 | 0986BF0546 |
| CITROEN | C 4 Coupe 2.0 16v WT VTS | EW10J4S | 10.04 => 12.10 | OB0002 | 0986B00002 | AB2505 | 0986B02505 | | Filtro de por vida | CB0546 | 0986BF0546 |
| CITROEN | C 4 2.0 HDI 110 | DW10BTED4 | 06.07 => | OB0705 | 0986B00705 | AB2505 | 0986B02505 | N7006 | 0450907006 | CB0546 | 0986BF0546 |
| CITROEN | | | | | | S3150 | 1457433150 | | | | |
| CITROEN | C 4 II 1.6 HDI | DV6 | 04.11 = > 11.14 | OB0711 | 0986B00711 | AB2505 | 0986B02505 | N2862 | F026402862 | CB0546 | 0986BF0546 |
| CITROEN | C 4 Picasso / Grand Picasso | 2.0 16v EW10A | 06.07 => | OB0705 | 0986B00705 | AB2369 | 0986B02369 | | Filtro de por vida | CB0656 | 0986BF0656 |

| MARCA | VEHÍCULO | MOTOR | FECHA | SC | ACEITE | SC | AIRE | SC | COMBUSTIBLE | SC | HABITÁCULO |
|---|---|---|---|---|---|---|---|---|---|---|---|
| CITROEN | C 4 Picasso / Grand Picasso | 1.6HDI DV6TED4 | 05.10 => | OB0711 | 0986B00711 | AB2505 | 0986B02505 | N7006 | 0450907006 | CB0656 | 0986BF0656 |
| CITROEN | C 4 Picasso / Grand Picasso II | 1.6HDI DV6TED4 | 06.14 => | OB0711 | 0986B00711 | AB2509 | 0986B02509 | N2862 | F026402862 | CB0656 | 0986BF0656 |
| CITROEN | C 4 Lounge | 1.6THP EP6DTMD | 08.13 => | OB0705 | 0986B00705 | AB2515 | 0986B02515 | "GB0024 /F2161" | 0986BF0024/0450902161 | CB0546 | 0986BF0546 |
| CITROEN | C 4 Lounge | 2.0DW10 | 08.13 => | OB0705 | 0986B00705 | AB2369 | 0986B02369 | "GB0024 /F2161" | 0986BF0024/0450902161 | CB0546 | 0986BF0546 |
| CITROEN | C 4 Aircross | 2.0iMMC4B11 | 11.13 => | OB0015 | 0986B00015 | | | | Filtro de por vida | CB0657 | 0986BF0657 |
| CITROEN | C 5 2.0 16v | EW10J4 | 12.00 => 01.02 | OB0002 | 0986B00002 | AB2343 | 0986B02343 | "GB0024 /F2161" | 0986BF0024/0450902161 | R2412 | 1987432412 |
| CITROEN | C 5 2.0 16v | EW10J4 | 01.02 => | OB0705 | 0986B00705 | AB2343 | 0986B02343 | "GB0024 /F2161" | 0986BF0024/0450902161 | R2412 | 1987432412 |
| CITROEN | C 5 2.0 16v | EW10A | 11.04 => 05.08 | OB0002 OB0705 | 0986B00002/0986B00705 | AB2343 | 0986B02343 | | | R2412 | 1987432412 |
| CITROEN | C 5 2.0 HDI 110 | DW10BTED4 | 12.00 => 01.02 | OB0002 | 0986B00002 | AB2343 | 0986B02343 | DB0423 DB0209 | 0986BF0423 /0986BF0209 | R2412 | 1987432412 |
| CITROEN | C 5 2.0 HDI 135 | DW10BTED4 | 11.04 => 05.08 | OB0002 OB0705 | 0986B00002/0986B00705 | AB2343 | 0986B02343 | DB0423/DB0209/N1723 | 0986BF0423/0986BF0209/ 1457431723 | R2412 | 1987432412 |
| CITROEN | C 5 2.0 HDI | DW10BTED4 | 04.08 => 03.09 | OB0705 | 0986B00705 | S3596 | 1457433596 | N1723 | 1457431723 | R2311 | 1987432311 |
| CITROEN | C 5 3.0i V6 | ES9J4S | 12.00 =>10.04 | OB0002 | 0986B00002 | AB2343 | 0986B02343 | "GB0024 /F2161" | 0986BF0024/0450902161 | R2412 | 1987432412 |
| CITROEN | C 5 II 3.0 V6 | ES9A | 04.08 => | OB0002 | 0986B00002 | S3591 | 1457433591 | "GB0024 /F2161" | 0986BF0024/0450902161 | R2311 | 1987432311 |
| CITROEN | C5 1.6 THP 156CV | EP6DT | 04.08 => | OB0705 | 0986B00705 | | | "GB0024 /F2161" | 0986BF0024/0450902161 | | |
| CITROEN | C-ELYSEE | 1.6Vti(115cv) | 11.16 => | OB0705 | 0986B00705 | AB2518 | 0986B02518 | | | | |
| CITROEN | DS3 1.6 16v THP | EP6DT | 12.10 => | OB0705 | 0986B00705 | AB2515 | 0986B02515 | "GB0024 /F2161" | 0986BF0024/0450902161 | M2136 | 1987432136 |
| CITROEN | DS4 1.6 THP | EP6CDTMD | 02.12 => | OB0705 | 0986B00705 | AB2515 | 0986B02515 | "GB0024 /F2161" | 0986BF0024/0450902161 | CB0546 | 0986BF0546 |
| CITROEN | IES Carga -Gringa | 0.6 | | OB0032 | 0986B00032 | | | GB0008 | 0986BF0008 | | |
| CITROEN | Jumper | 1.9Diesel c/bomba BOSCH | 99 => 02 | OB0002 | 0986B00002 | AB3554 | 0986B03554 | DB0732 | 0986450732 | CB0510 | 0986BF0510 |
| CITROEN | Jumper | 1.9Diesel c/bomba CAV | 99 => 02 | OB0002 | 0986B00002 | AB3554 | 0986B03554 | DB0695 | 0986450695 | CB0510 | 0986BF0510 |
| CITROEN | Jumper | 1.9TD c/bomba BOSCH | 99 => 02 | OB0002 | 0986B00002 | AB2282 | 1457432282 | DB0732 | 0986450732 | CB0510 | 0986BF0510 |
| CITROEN | Jumper | 1.9TD c/bomba CAV | 99 => 02 | OB0002 | 0986B00002 | AB2282 | 1457432282 | DB0695 | 0986450695 | CB0510 | 0986BF0510 |
| CITROEN | Jumper | 2.5Diesel c/bomba BOSCH | 99 => 02 | OB0002 | 0986B00002 | AB2282 | 1457432282 | DB0732 | 0986450732 | CB0510 | 0986BF0510 |
| CITROEN | Jumper | 2.5Diesel c/bomba CAV | 99 => 02 | OB0002 | 0986B00002 | AB2282 | 1457432282 | DB0695 | 0986450695 | CB0510 | 0986BF0510 |
| CITROEN | Jumper | 2.5TD c/bomba BOSCH | 99 => 02 | OB0002 | 0986B00002 | AB2282 | 1457432282 | GB0732 | 0986450732 | CB0510 | 0986BF0510 |
| CITROEN | Jumper | 2.5TD c/bomba CAV | 99 => 02 | OB0002 | 0986B00002 | AB2282 | 1457432282 | GB0695 | 0986450695 | CB0510 | 0986BF0510 |
| CITROEN | Jumper I | 2.8HDi Diesel | 02-02 => | OB1001 | 0986B01001 | AB2282 | 1457432282 | DB0732 | 0986450732 | CB0510 | 0986BF0510 |
| CITROEN | Jumper I | 2.8Diesel-2.8Turbo Diesel | => 01.02 | OB1001 | 0986B01001 | AB2282 | 1457432282 | DB0732 | 0986450732 | CB0510 | 0986BF0510 |
| CITROEN | Jumper II | 2.8HDi Diesel | 01.07 => | OB1001 | 0986B01001 | AB2282 | 1457432282 | N0001 | 1457070001 | | |
| CITROEN | Mehari - IES 3CV | 0.6 | | OB0032 | 0986B00032 | | | GB0008 | 0986BF0008 | | |
| CITROEN | Safari - America | 0.6 | | OB0032 | 0986B00032 | | | GB0008 | 0986BF0008 | | |
| CITROEN | Saxo | 1.1i | 01 => 04 | P9193 OB0002 | 1457429193/0986B00002 | S3769 | 1457433769 | GB0024 | 0986BF0024 | | |
| CITROEN | Saxo | 1.4i (TU3JP) | 01 => 04 | P9193 | 1457429193/0986B00002 | S3769 | 1457433769 | GB0024 | 0986BF0024 | | |
| CITROEN | Saxo | 1.5Diesel | 01 => 04 | OB0002 OB0002 | 0986B00002 | | | "N4103/DB0209" | 1457434103/0986BF0209 | | |
| CITROEN | Xantia | 1.9Turbo Diesel | => 01 | OB0002 | 0986B00002 | AB2343 | 0986B02343 | DB0204 | 0986BF0204 | | |
| CITROEN | Xantia | 2.016v RFV | 98 => 01 | OB0002 | 0986B00002 | AB2343 | 0986B02343 | GB0024 | 0986BF0024 | | |
| CITROEN | Xantia | 2.016v RVY-RFT | => 98 | OB0002 | 0986B00002 | AB2019 | 0986B02019 | GB0240 | 0986450240 | | |
| CITROEN | Xantia | 2.08v | => 01 | OB0002 | 0986B00002 | AB2343 | 0986B02343 | GB0024 | 0986BF0024 | | |
| CITROEN | Xantia | 2.0HDI Diesel | => 01 | OB0002 | 0986B00002 | AB2343 | 0986B02343 | DB0423 DB0209 | 0986BF0423/0986BF0209 | | |

| MARCA | VEHÍCULO | MOTOR | FECHA | SC | ACEITE | SC | AIRE | SC | COMBUSTIBLE | SC | HABITÁCULO |
|---|---|---|---|---|---|---|---|---|---|---|---|
| CITROEN | Xantia | 3.0iV6 | => 01 | OB0002 | 0986B00002 | AB2343 | 0986B02343 | GB0024 | 0986BF0024 | | |
| CITROEN | Xsara 1.4 HDI | 8HXDV4TD | 02.03 => 08.05 | OB0711 | 0986B00711 | S3076 | 1457433076 | N6460 | 0450906460 | | |
| CITROEN | Xsara 1.6 i 16v | NFU | 10.00 => 08.05 | P9193 | 1457429193 | AB2312 | 0986B02312 | GB0024 | 0986BF0024 | CB0576 | 0986BF0576 |
| CITROEN | Xsara | 1.8i16v | 99 => 02 | OB0002 | 0986B00002 | S3527 | 1457433527 | GB0024 | 0986BF0024 | | |
| CITROEN | Xsara 1.9 D | XUD9A | 10.98 => | OB0002 | 0986B00002 | AB2026 | 0986B02026 | DB0204 | 0986BF0204 | | |
| CITROEN | Xsara 1.9 D | DW8/WJY | 07.98 => 08.05 | | | AB2016 | 0986B02016 | DB0207 | 0986BF0207 | | |
| CITROEN | Xsara 1.9 TD | XUD9TE | 10.98 => | | | | | DB0204 | 0986BF0204 | | |
| CITROEN | Xsara | 2.0HDI90Diesel | 00 => 11-04 | OB0002 | 0986B00002 | AB2500 | 0986B02500 | DB0423 DB0209 | 0986BF0423/0986BF0209 | CB0576 | 0986BF0576 |
| CITROEN | Xsara | 2.0i16vVTS | 99 => 08-00 | OB0002 | 0986B00002 | | | GB0024 | 0986BF0024 | | |
| CITROEN | Xsara 2.0i 16v Exclusive | EW10 | 10.00 => | OB0002 | 0986B00002 | AB2500 | 0986B02500 | GB0024 | 0986BF0024 | | |
| CITROEN | Xsara Picasso 1.6 i | XU5JP | 01.00 => | OB0705 OB0002 | 0986B00705/0986B00002 | AB2500 AB2312 | 0986B02500/0986B02312 | "GB0024/F2161" | 0986BF0024/ 0450902161 | CB0534 | 0986BF0534 |
| CITROEN | Xsara Picasso 1.6 16v | TU5JP4 | 09.05 => 04.10 | OB0705 | 0986B00705 | AB2518 | 0986B02518 | GB0024 | 0986BF0024 | CB0546 | 0986BF0546 |
| CITROEN | Xsara Picasso 2.0i 16v | RFNEW10 | 02.03 => 4.10 | OB0002 | 0986B00002 | AB2016 | 0986B02016 | GB0024 | 0986BF0024 | | |
| CITROEN | Xsara Picasso 2.0 HDI | DW10ATED | 12.99 => | OB0002 | 0986B00002 | "S3555/S0010" | 1457433555/F026400010 | DB0423 DB0209 | 0986BF0423/0986BF0209 | CB0656 | 0986BF0656 |
| CITROEN | ZX | 1.8i | => 99 | OB0002 | 0986B00002 | AB2339 | 0986B02339 | GB0024 | 0986BF0024 | | |
| CITROEN | ZX | 1.9 Diesel | => 00 | OB0002 | 0986B00002 | AB2025 | 0986B02025 | DB0204 | 0986BF0204 | | |
| CITROEN | ZX 1.9 TD | | 07.95 => | | | | | | | | |
| CITROEN | ZX | 2.0i | => 97 | OB0002 | 0986B00002 | AB2339 | 0986B02339 | GB0024 | 0986BF0024 | | |
| CLAAS | | | | | | | | | | | |
| CLAAS | Cosechadoras - Maquinarias | | | | | | | | | | |
| CLAAS | 56 Dominator | Perkins4.248 | | P3194 | | AB3511(P) | 0986B03511 | | | | |
| CLAAS | | | | | | AB3903(S) | 0986B03903 | | | | |
| CLAAS | 68 - 68 S Dominator | Perkins6.354.4 | | | | AB3511(P) | 0986B03511 | | | | |
| CLAAS | | | | | | AB3903(S) | 0986B03903 | | | | |
| CLAAS | 88 VX Dominator | DCOM366LA | | | | AB3535(P) | 0986B03535 | GB0695 | 0986450695 | | |
| CLAAS | | | | | | AB3904(S) | 0986B03904 | | | | |
| CLAAS | 98 S Dominator | PerkinsT1006-6 | | | | AB3535(P) | 0986B03535 | GB0695 | 0986450695 | | |
| CLAAS | | | | | | AB3904(S) | 0986B03904 | | | | |
| CLAAS | 108 SL Dominator | DCOM421 | | OB1562 | 0986B01562 | AB3535(P) | 0986B03535 | DB0703 | 0986450703 | | |
| CLAAS | | | | | | AB3904(S) | 0986B03904 | | | | |
| CLAAS | 108 S - 108 SL - 108 SL MAX Dominator | Perkins540V8 | | | | AB3535(P) | 0986B03535 | GB0695 | 0986450695 | | |
| CLAAS | | | | | | AB3904(S) | 0986B03904 | | | | |
| CLAAS | Jaguar 830 - 850 - 870 | DCOM457LA | 11-00 => | OB1561 | 0986B01561 | | | N9655 | 1457429655 | | |
| CLAAS | Jaguar 860 - 880 | DCOM442LA | | OB1561 | 0986B01561 | | | N9655 | 1457429655 | | |
| CLAAS | Jaguar 890 - 900 | DCOM502LAV8 | 11-00 => | P9128 | 1457429128 | | | N9655 | 1457429655 | | |
| CLAAS | Medion 340 | DCOM906LA | 04-00 => | OB1569 | 0986B01569 | | | DB0201 | 0986BF0201 | | |
| CLAAS | Mega 204 | DCOM906LA | 09-03 => | OB1569 | 0986B01569 | | | DB0201 | 0986BF0201 | | |
| CLAAS | Mega 218 | DCOM441A | | OB1562 | 0986B01562 | AB3515(P) | 0986B03515 | DB0703 | 0986450703 | | |
| DAEWOO | | | | | | | | | | | |

| MARCA | VEHÍCULO | MOTOR | FECHA | SC | ACEITE | SC | AIRE | SC | COMBUSTIBLE | SC | HABITÁCULO |
|---|---|---|---|---|---|---|---|---|---|---|---|
| DAEWOO | Cielo | 1.5i16v | => 01.03 | OB0021 | 0986B00021 | | | | | | |
| DAEWOO | Damas - Labo | 0.8 | 96 => 03 | | | | | | | | |
| DAEWOO | Espero | 2.0i | 01.01 => 01.01 | OB0021 | 0986B00021 | | | | | | |
| DAEWOO | Lanos | 1.5i | 01.97 => 01.03 | OB0021 | 0986B00021 | | | GB0018 | 0986BF0018 | | |
| DAEWOO | Lanos | 1.6i16v | 01.97 => 01.03 | OB0021 | 0986B00021 | | | GB0018 | 0986BF0018 | | |
| DAEWOO | Leganza | 2.0i16v | 01.97 => 01.03 | OB0021 | 0986B00021 | | | GB0018 | 0986BF0018 | | |
| DAEWOO | Matiz | 0.8 | 99 => 04 | OB0028 | 0986B00028 | | | GB0018 | 0986BF0018 | | |
| DAEWOO | Nubira | 1.6i16v | => 01.03 | OB0021 | 0986B00021 | | | GB0018 | 0986BF0018 | | |
| DAEWOO | Nubira | 2.0i16v | => 01.03 | OB0021 | 0986B00021 | | | GB0018 | 0986BF0018 | | |
| DAEWOO | Racer | | 01.94 => 01.98 | OB0021 | 0986B00021 | | | | | | |
| DAEWOO | Tico | 0.8 | => 01 | OB0028 | 0986B00028 | | | | | | |
| DAEWOO | Tacuma | 2.0i16v | 01 => 03 | OB0021 | 0986B00021 | | | | | | |
| DAEWOO | Tico | 0,8 | | | | | | | | | |
| DAIHATSU | | | | | | | | | | | |
| DAIHATSU | Applause | 1.6i16v | 98 => 01 | | | | | | | | |
| DAIHATSU | Charade | 1.3i16v-1.5i | => 98 | OB2350 | 0986452350 | | | | | | |
| DAIHATSU | Cuore | 0.85i | 95 => 00 | OB2350 | 0986452350 | | | | | | |
| DAIHATSU | Delta Route Furgón-Van | 2.8Diesel | 99 => 03 | OB2350 | 0986452350 | | | | | | |
| DAIHATSU | Delta Bus | 3.7Diesel | | OB2350 | 0986452350 | | | | | | |
| DAIHATSU | Delta Camión V 116 - V118 | 3.7Diesel | 97 => 03 | OB2350 | 0986452350 | | | | | | |
| DAIHATSU | Feroza | 1.6 | 97 => | OB2350 | 0986452350 | | | | | | |
| DAIHATSU | Feroza | 1.6i16v | 98 => | | | | | | | | |
| DAIHATSU | Mira | 1.0i12v | 99 => 02 | | | | | | | | |
| DAIHATSU | Move | 0.85-1.0 | 98 => 02 | | | | | | | | |
| DAIHATSU | Rocky | 1.6i | => 03 | | | | | | | | |
| DAIHATSU | Rocky | 2.8 Diesel | | | | | | DB0719 | 0986450719 | | |
| DAIHATSU | Rocky | 2.8 16vTurboDiesel | | OB2354 | 0986452354 | | | DB0719 | 0986450719 | | |
| DAIHATSU | Sirion | 1.0i12v | 98 => 03 | | | | | | | | |
| DAIHATSU | Terios | 1.3i16v | 98 => 02 | | | | | | | | |
| DAIHATSU | Wide Furgón Van | 500 | | OB0028 | 0986B00028 | | | | | | |
| DAIHATSU | Wide Furgón Van | 850 | | OB0028 | 0986B00028 | | | | | | |
| DEUTZ | | | | | | | | | | | |
| DEUTZ | Comerciales - Tractores - Motores | | | | | | | | | | |
| DEUTZ | Deutz-Puma | | | H33 | 0451104520 | | | | | | |
| DEUTZ | Agrale Deutz | MWM4.07TCA2.8 | 01.01 => | OB1016 | 0986B01016 | AB3001(P) | 0986B03001 | DB0851 | 0986450851 | | |
| DEUTZ | | | | | | AB3408(S) | 0986B03408 | | | | |
| DEUTZ | Agrale Deutz | MWM4.10TCA4.3 | 00 => | OB1027 | 0986B01027 | AB3001(P) | 0986B03001 | DB0709(BoxSA) | 0986450709 | | |
| DEUTZ | | | | | | AB3408(S) | 0986B03408 | | | | |
| DEUTZ | Agrale Deutz | MWM4.10TCA4.3 | 99 => | OB1015 | 0986B01015 | AB3535(P) | 0986B03535 | DB0709(BoxSA) | 0986450709 | | |

| MARCA | VEHÍCULO | MOTOR | FECHA | SC | ACEITE | SC | AIRE | SC | COMBUSTIBLE | SC | HABITÁCULO |
|---|---|---|---|---|---|---|---|---|---|---|---|
| DEUTZ | | | | | | AB3904(S) | 0986B03904 | | | | |
| DEUTZ | Agrale | MWM4.10 Turbo | 00 => | OB1027 | 0986B01027 | AB3535(P) | 0986B03535 | DB0709(BoxSA) | 0986450709 | | |
| DEUTZ | | | | | | AB3904(S) | 0986B03904 | | | | |
| DEUTZ | Agrale Dynamic - Stark | BF4L913 | | OB1027 | 0986B01027 | AB3526 | 0986B03526 | DB0421(P) | 0986BF0421 | | |
| DEUTZ | | | | | | | | DB0519(S) | 0986450519 | | |
| DEUTZ | Agrale Dynamic - Stark | F4L913 | | OB1027 | 0986B01027 | AB3526 | 0986B03526 | DB0421(P) | 0986BF0421 | | |
| DEUTZ | | | | | | | | DB0519(S) | 0986450519 | | |
| DEUTZ | A2L 1114/ 2114 | | 72 => | | | | | DB0420(P) | 0986BF0420 | | |
| DEUTZ | | | | | | | | DB0695(S) | 0986450695 | | |
| DEUTZ | A2L 1114/ 2114 | | 77 => | | | | | DB0421(P) | 0986BF0421 | | |
| DEUTZ | | | | | | | | DB0695(S) | 0986450695 | | |
| DEUTZ | A3L 1114/ 2114 | | 72 => | | | | | DB0420(P) | 0986BF0420 | | |
| DEUTZ | | | | | | | | DB0695(S) | 0986450695 | | |
| DEUTZ | A3L 1114/ 2114 | | 77 => | | | | | DB0421(P) | 0986BF0421 | | |
| DEUTZ | | | | | | | | DB0695(S) | 0986450695 | | |
| DEUTZ | A4L 514 1114/2114 | | 72 => | OB1027 | 0986B01027 | | | DB0695 | 0986450695 | | |
| DEUTZ | A4L 514 1114/2114 | | 77 => | OB1027 | 0986B01027 | | | DB0421 | 0986BF0421 | | |
| DEUTZ | A6L 1114 | | 72 => | OB1027 | 0986B01027 | | | DB0695 | 0986450695 | | |
| DEUTZ | A6L 1114 | | 77 => | OB1027 | 0986B01027 | | | DB0421(P) | 0986BF0421 | | |
| DEUTZ | | | | | | | | DB0695(S) | 0986450695 | | |
| DEUTZ | A 30 - A 40 - A 55 | F2L514-F3L514 | => 68 | | | | | DB0703(P) | 0986450703 | | |
| DEUTZ | | | | | | | | DB0696(S) | 0986450696 | | |
| DEUTZ | A 30 - A 40 - A 55 | F2L514-F3L514 | 68 => | OB0014 | 0986B00014 | | | DB0696(P) | 0986450696 | | |
| DEUTZ | | | | | | | | DB0696(S) | 0986450696 | | |
| DEUTZ | A 46 - A 65 | F2L1114-F3L1114 | 70 => 73 | OB0014 | 0986B00014 | | | DB0696(P) | 0986450696 | | |
| DEUTZ | | | | | | | | DB0696(S) | 0986450696 | | |
| DEUTZ | A 46 - A 65 | F2L514-F3L1114 | 73 => | OB0014 | 0986B00014 | | | DB0695(P) | 0986450695 | | |
| DEUTZ | | | | | | | | DB0695(S) | 0986450695 | | |
| DEUTZ | A 30 - A 40 | F2L1114/2114 | 77 => | | | | | DB0421(P) | 0986BF0421 | | |
| DEUTZ | | | | | | | | DB0695(S) | 0986450695 | | |
| DEUTZ | A 55 - A 65 | F3L1114/2114 | 72 => | | | | | DB0420(P) | 0986BF0420 | | |
| DEUTZ | | | | | | | | DB0695(S) | 0986450695 | | |
| DEUTZ | A 55 - A 65 | F3L1114/2114 | 77 => | | | | | DB0421(P) | 0986BF0421 | | |
| DEUTZ | | | | | | | | DB0695(S) | 0986450695 | | |
| DEUTZ | A 70 - A 85 - A 100 | F4L514-F6L514 | => 68 | | | | | DB0703(P) | 0986450703 | | |
| DEUTZ | | | | | | | | DB0696(S) | 0986450696 | | |
| DEUTZ | A 70 - A 85 - A 100 | F4L514-F4L1114 | 68 => | OB1027 | 0986B01027 | | | DB0696(P) | 0986450696 | | |
| DEUTZ | | | | | | | | DB0696(S) | 0986450696 | | |
| DEUTZ | A 70 - A 85 - A 100 | F4L1114/2114 | 72 => | OB1027 | 0986B01027 | | | DB0420(P) | 0986BF0420 | | |

| MARCA | VEHÍCULO | MOTOR | FECHA | SC | ACEITE | SC | AIRE | SC | COMBUSTIBLE | SC | HABITÁCULO |
|---|---|---|---|---|---|---|---|---|---|---|---|
| DEUTZ | | | | | | | | DB0695(S) | 0986450695 | | |
| DEUTZ | A 70 - A 85 - A 100 | F4L1114/2114 | 77 => | OB1027 | 0986B01027 | | | DB0421(P) | 0986BF0421 | | |
| DEUTZ | | | | | | | | DB0695(S) | 0986450695 | | |
| DEUTZ | A 130 | F6L1114/2114 | 72 => | OB1027 | 0986B01027 | | | DB0420(P) | 0986BF0420 | | |
| DEUTZ | | | | | | | | DB0695(S) | 0986450695 | | |
| DEUTZ | A 130 | F6L1114/2114 | 77 => | OB1027 | 0986B01027 | AB3511(P) | 0986B03511 | DB0421(P) | 0986BF0421 | | |
| DEUTZ | | | | | | AB3903(S) | 0986B03903 | DB0695(S) | 0986450695 | | |
| DEUTZ | AX 80 | | | OB1027 | 0986B01027 | AB3526(P) | 0986B03526 | DB0421 | 0986BF0421 | | |
| DEUTZ | | | | | | AB3902(S) | 0986B03902 | | | | |
| DEUTZ | | | | | | | | | | | |
| DEUTZ | AX 80 S - AX 80 C | | | OB1027 | 0986B01027 | AB3526(P) | 0986B03526 | DB0421(P) | 0986BF0421 | | |
| DEUTZ | | | | | | AB3902(S) | 0986B03902 | DB0519(S) | 0986450519 | | |
| DEUTZ | | | | | | | | | | | |
| DEUTZ | AX 100 | | | OB1027 | 0986B01027 | AB3511(P) | 0986B03511 | DB0421 | 0986BF0421 | | |
| DEUTZ | | | | | | AB3903(S) | 0986B03903 | | | | |
| DEUTZ | AX 100 S | | | OB1018 | 0986B01018 | AB3526(P) | 0986B03526 | DB0421 | 0986BF0421 | | |
| DEUTZ | | | | | | AB3902(S) | 0986B03902 | | | | |
| DEUTZ | | | | | | | | | | | |
| DEUTZ | AX 120 | | | OB1027 | 0986B01027 | AB3511(P) | 0986B03511 | DB0421(P) | 0986BF0421 | | |
| DEUTZ | | | | | | AB3903(S) | 0986B03903 | DB0519(S) | 0986450519 | | |
| DEUTZ | AX 120 S | | | OB1027 | 0986B01027 | AB3511(P) | 0986B03511 | DB0421(P) | 0986BF0421 | | |
| DEUTZ | | | | | | AB3903(S) | 0986B03903 | DB0519(S) | 0986450519 | | |
| DEUTZ | AX 160 | | | OB1018 | 0986B01018 | AB3535(P) | 0986B03535 | DB0421 | 0986BF0421 | | |
| DEUTZ | | | | | | AB3904(S) | 0986B03904 | | | | |
| DEUTZ | AX 160 S Turbo | | | OB1018 | 0986B01018 | AB3535(P) | 0986B03535 | DB0421(P) | 0986BF0421 | | |
| DEUTZ | | | | | | AB3904(S) | 0986B03904 | DB0519(S) | 0986450519 | | |
| DEUTZ | AX 4.60 | F3L913 | | OB1027 | 0986B01027 | AB3534(P) | 0986B03535 | DB0421(P) | 0986BF0421 | | |
| DEUTZ | | | | | | AB3901(S) | 0986B03904 | DB0519(S) | 0986450519 | | |
| DEUTZ | AX 4.75 | F4L913 | | OB1027 | 0986B01027 | AB3526(P) | 0986B03526 | DB0421(P) | 0986BF0421 | | |
| DEUTZ | | | | | | AB3902(S) | 0986B03902 | DB0519(S) | 0986450519 | | |
| DEUTZ | AX 4.100 - 4.100 L | F5L913 | | OB1027 | 0986B01027 | AB3526(P) | 0986B03526 | DB0421(P) | 0986BF0421 | | |
| DEUTZ | | | | | | AB3902(S) | 0986B03902 | DB0519(S) | 0986450519 | | |
| DEUTZ | AX 4.120 - 4.120 L | F6L913 | => 12.83 | OB1027 | 0986B01027 | AB3511(P) | 0986B03511 | DB0421(P) | 0986BF0421 | | |
| DEUTZ | | | | | | AB3903(S) | 0986B03903 | DB0519(S) | 0986450519 | | |
| DEUTZ | AX 4.140 | BF6L913T | => 12.83 | OB1018 | 0986B01018 | AB3535(P) | 0986B03535 | DB0421(P) | 0986BF0421 | | |
| DEUTZ | | | | | | AB3904(S) | 0986B03904 | DB0519(S) | 0986450519 | | |
| DEUTZ | AX 4.160 | BF6L913 | => 12.83 | OB1018 | 0986B01018 | AB3535(P) | 0986B03535 | DB0421(P) | 0986BF0421 | | |
| DEUTZ | | | | | | AB3904(S) | 0986B03904 | DB0519(S) | 0986450519 | | |
| DEUTZ | AX 4.190 | BF6L913C | => 12.83 | OB1018 | 0986B01018 | AB3513(P) | 0986B03513 | DB0421(P) | 0986BF0421 | | |

| MARCA | VEHÍCULO | MOTOR | FECHA | SC | ACEITE | SC | AIRE | SC | COMBUSTIBLE | SC | HABITÁCULO |
|---|---|---|---|---|---|---|---|---|---|---|---|
| DEUTZ | | | | | | AB3905(S) | 0986B03905 | DB0519(S) | 0986450519 | | |
| DEUTZ | AX 5.65 | F3L913 | | OB1027 | 0986B01027 | AB3534(P) | 0986B03534 | DB0421(P) | 0986BF0421 | | |
| DEUTZ | | | | | | | | DB0519(S) | 0986450519 | | |
| DEUTZ | AX 5.80 | F4L913 | | OB1027 | 0986B01027 | AB3534(P) | 0986B03534 | DB0421(P) | 0986BF0421 | | |
| DEUTZ | | | | | | | | DB0519(S) | 0986450519 | | |
| DEUTZ | AX 5.100 | F5L913 | | OB1027 | 0986B01027 | AB3526(P) | 0986B03526 | DB0421(P) | 0986BF0421 | | |
| DEUTZ | | | | | | AB3902(S) | 0986B03902 | DB0519(S) | 0986450519 | | |
| DEUTZ | AX 5.125 | F6L913 | | OB1027 | 0986B01027 | AB3535(P) | 0986B03535 | DB0421(P) | 0986BF0421 | | |
| DEUTZ | | | | | | AB3904(S) | 0986B03904 | DB0519(S) | 0986450519 | | |
| DEUTZ | AX 5.145 | BF6L913 | | OB1027 | 0986B01027 | AB3535(P) | 0986B03535 | DB0421(P) | 0986BF0421 | | |
| DEUTZ | | | | | | AB3904(S) | 0986B03904 | DB0519(S) | 0986450519 | | |
| DEUTZ | AX 5.170 | BF6L913CTurbo | | OB1027 | 0986B01027 | AB3513(P) | 0986B03513 | DB0421(P) | 0986BF0421 | | |
| DEUTZ | | | | | | AB3905(S) | 0986B03905 | DB0519(S) | 0986450519 | | |
| DEUTZ | AX 5.190 | BF6L913CTurboPostenf. | | OB1018 | 0986B01018 | AB3513(P) | 0986B03513 | DB0421(P) | 0986BF0421 | CB0546 | 0986BF0546 |
| DEUTZ | | | | | | AB3905(S) | 0986B03905 | DB0519(S) | 0986450519 | | |
| DEUTZ | AX 5.220 | BF6L913C | | OB1018 | 0986B01018 | AB3513(P) | 0986B03513 | DB0421(P) | 0986BF0421 | CB0546 | 0986BF0546 |
| DEUTZ | | | | | | AB3905(S) | 0986B03905 | DB0519(S) | 0986450519 | | |
| DEUTZ | BF 4 L 913 | | | OB1027 | 0986B01027 | AB3526 | 0986B03526 | DB0421(P) | 0986BF0421 | | |
| DEUTZ | | | | | | | | DB0519(S) | 0986450519 | | |
| DEUTZ | BF 6 L 913 | | | OB1018 | 0986B01018 | AB3535(P) | 0986B03535 | DB0421(P) | 0986BF0421 | | |
| DEUTZ | | | | | | AB3904(S) | 0986B03904 | DB0519(S) | 0986450519 | | |
| DEUTZ | BF 6 L 1114-2114 | | | OB1027 | 0986B01027 | | | DB0696 | 0986450696 | | |
| DEUTZ | | | | | | | | DB0696 | 0986450696 | | |
| DEUTZ | BF 6 M 1015 | | | OB1018 | 0986B01018 | AB3536(P) | 0986B03536 | | | | |
| DEUTZ | BF 6 M 1015 C | | | OB1018 | 0986B01018 | AB3536(P) | 0986B03536 | | | | |
| DEUTZ | BGF 6 L 913 | motoragas | | OB1018 | 0986B01018 | AB3535(P) | 0986B03535 | | | | |
| DEUTZ | Cosechadora 4040 | BF6L913C | | OB1018 | 0986B01018 | AB3513(P) | 0986B03513 | DB0421(P) | 0986BF0421 | | |
| DEUTZ | | | | | | AB3905(S) | 0986B03905 | DB0519(S) | 0986450519 | | |
| DEUTZ | Cosechadora Optima E | BF6L913 | | OB1018 | 0986B01018 | AB3535(P) | 0986B03535 | DB0421(P) | 0986BF0421 | | |
| DEUTZ | | | | | | AB3904(S) | 0986B03904 | DB0519(S) | 0986450519 | | |
| DEUTZ | D 4007 | | | OB1027 | 0986B01027 | AB3534(P) | 0986B03534 | DB0421 | 0986BF0421 | | |
| DEUTZ | | | | | | | | | | | |
| DEUTZ | D 5207 | | | OB1027 | 0986B01027 | AB3534(P) | 0986B03534 | DB0421 | 0986BF0421 | | |
| DEUTZ | | | | | | | | | | | |
| DEUTZ | D 6007 | F4L913 | | OB1027 | 0986B01027 | AB3534(P) | 0986B03534 | DB0519(P) | 0986450519 | | |
| DEUTZ | | | | | | | | DB0421(S) | 0986BF0421 | | |
| DEUTZ | D 6207 | F4L913 | | OB1027 | 0986B01027 | AB3534(P) | 0986B03534 | DB0519(P) | 0986450519 | | |
| DEUTZ | | | | | | | | DB0421(S) | 0986BF0421 | | |
| DEUTZ | D 6807 | F4L912 | | OB1027 | 0986B01027 | AB3526(P) | 0986B03526 | DB0519(P) | 0986450519 | | |

| MARCA | VEHÍCULO | MOTOR | FECHA | SC | ACEITE | SC | AIRE | SC | COMBUSTIBLE | SC | HABITÁCULO |
|---|---|---|---|---|---|---|---|---|---|---|---|
| DEUTZ | | | | | | AB3902(S) | 0986B03902 | DB0421(S) | 0986BF0421 | | |
| DEUTZ | D 7207 | F4L912 | | OB1027 | 0986B01027 | AB3526(P) | 0986B03526 | DB0519(P) | 0986450519 | | |
| DEUTZ | | | | | | AB3902(S) | 0986B03902 | DB0421(S) | 0986BF0421 | | |
| DEUTZ | D 7807 | F4L913 | | OB1027 | 0986B01027 | AB3534(P) | 0986B03534 | DB0421 | 0986BF0421 | | |
| DEUTZ | D 7807 A | | | OB1027 | 0986B01027 | AB3526(P) | 0986B03526 | DB0519(P) | 0986450519 | | |
| DEUTZ | | | | | | AB3902(S) | 0986B03902 | DB0421(S) | 0986BF0421 | | |
| DEUTZ | DX 4.70 A | BF4L913 | | OB1027 | 0986B01027 | AB3526(P) | 0986B03526 | DB0519(P) | 0986450519 | | |
| DEUTZ | | | | | | AB3902(S) | 0986B03902 | DB0421(S) | 0986BF0421 | | |
| DEUTZ | DX 90 | F5L913 | => 12.83 | OB1027 | 0986B01027 | AB3511(P) | 0986B03511 | DB0421 | 0986BF0421 | | |
| DEUTZ | | | | | | AB3903(S) | 0986B03903 | | | | |
| DEUTZ | DX 90 | F6L913 | | OB1027 | 0986B01027 | AB3511(P) | 0986B03511 | DB0421 | 0986BF0421 | | |
| DEUTZ | | | | | | AB3903(S) | 0986B03903 | | | | |
| DEUTZ | DX 120 | F6L913 | => 12.83 | OB1027 | 0986B01027 | AB3511(P) | 0986B03511 | DB0421 | 0986BF0421 | | |
| DEUTZ | | | | | | AB3903(S) | 0986B03903 | | | | |
| DEUTZ | DX 160 | F6L912 | | OB1018 | 0986B01018 | AB3535(P) | 0986B03535 | DB0421 | 0986BF0421 | | |
| DEUTZ | | | | | | AB3904(S) | 0986B03904 | | | | |
| DEUTZ | DX 160 | BF6L913 | => 12.83 | OB1018 | 0986B01018 | AB3535(P) | 0986B03535 | DB0421 | 0986BF0421 | | |
| DEUTZ | | | | | | AB3904(S) | 0986B03904 | | | | |
| DEUTZ | FX 80 | F4L913 | 79 => | OB1027 | 0986B01027 | AB3526(P) | 0986B03526 | DB0519(P) | 0986450519 | | |
| DEUTZ | | | | | | AB3902(S) | 0986B03902 | DB0421(S) | 0986BF0421 | | |
| DEUTZ | FX 100 | F5L913 | 79 => | OB1027 | 0986B01027 | AB3526(P) | 0986B03526 | DB0519(P) | 0986450519 | | |
| DEUTZ | | | | | | AB3902(S) | 0986B03902 | DB0421(S) | 0986BF0421 | | |
| DEUTZ | FX 120 | F6L913 | 79 => | OB1027 | 0986B01027 | AB3511(P) | 0986B03511 | DB0519(P) | 0986450519 | | |
| DEUTZ | | | | | | AB3903(S) | 0986B03903 | DB0421(S) | 0986BF0421 | | |
| DEUTZ | F3L 913 | | | OB1027 | 0986B01027 | AB3534(P) | 0986B03534 | DB0421(P) | 0986BF0421 | | |
| DEUTZ | | | | | | | | DB0519(S) | 0986450519 | | |
| DEUTZ | F5L 913 | | | OB1027 | 0986B01027 | AB3526(P) | 0986B03526 | DB0421(P) | 0986BF0421 | | |
| DEUTZ | | | | | | AB3902(S) | 0986B03902 | DB0519(S) | 0986450519 | | |
| DEUTZ | F6L 913 | | | OB1027 | 0986B01027 | AB3526(P) | 0986B03526 | DB0421(P) | 0986BF0421 | | |
| DEUTZ | | | | | | AB3902(S) | 0986B03902 | DB0519(S) | 0986450519 | | |
| DEUTZ | F6L 913 | | | OB1018 | 0986B01018 | AB3511(P) | 0986B03511 | DB0421(P) | 0986BF0421 | | |
| DEUTZ | | | | | | | | DB0519(S) | 0986450519 | | |
| DEUTZ | F8L 413 | | | P3220 | 0451203220 | AB3511(P) | 0986B03511 | DB0696(P) | 0986450696 | | |
| DEUTZ | | | | HB1652(DH) | 0986B01652 | | | DB0696(S) | 0986450696 | | |
| DEUTZ | GF 4 L 913 | motoragas | | OB1027 | 0986B01027 | AB3526 | 0986B03526 | | | | |
| DEUTZ | GF 5 L 913 | motoragas | | OB1027 | 0986B01027 | AB3526 | 0986B03526 | | | | |
| DEUTZ | GF 6 L 913 | motoragas | | OB1027 | 0986B01027 | AB3511(P) | 0986B03511 | | | | |
| DEUTZ | Magirus Deutz | | | OB1027 | 0986B01027 | AB3513(P) | 0986B03513 | DB0695 | 0986450695 | | |
| DEUTZ | Powermax 300 Turbo Postenf. | BF6L513RC | | OB1027 | 0986B01027 | AB3515(P) | 0986B03515 | DB0732 | 0986450732 | | |

| MARCA | VEHÍCULO | MOTOR | FECHA | SC | ACEITE | SC | AIRE | SC | COMBUSTIBLE | SC | HABITÁCULO |
|---|---|---|---|---|---|---|---|---|---|---|---|
| DEUTZ | | | | | | | | | | | |
| DEUTZ | Stallion 12-130 | F6L913V | | OB1018 | 0986B01018 | AB3535(P) | 0986B03535 | DB0732 | 0986450732 | | |
| DEUTZ | | | | | | AB3904(S) | 0986B03904 | | | | |
| DEUTZ | Stallion 15-160 | BF6L913 | | OB1018 | 0986B01018 | AB3535(P) | 0986B03535 | DB0732 | 0986450732 | | |
| DEUTZ | | | | | | AB3904(S) | 0986B03904 | | | | |
| DEUTZ | 1322 H | BF6L913C | | OB1018 | 0986B01018 | AB3513(P) | 0986B03513 | DB0519(P) | 0986450519 | | |
| DEUTZ | | | | OB1027 | 0986B01027 | AB3905(S) | 0986B03905 | DB0421(S) | 0986BF0421 | | |
| DEUTZ | Micro Deutz 1015 | OA104/105superbajo | | OB1027 | 0986B01027 | | | | | | |
| DIMEX | | | | | | | | | | | |
| DIMEX | Omnibus | | | | | | | | | | |
| DIMEX | D - 916 | 5.9Cummins6BTAA | 99 => 00 | OB1008 | 0986B01008 | | | DB0519(P) | 0986450519 | | |
| DIMEX | | | | | | | | DB0713(S) | 0986450713 | | |
| DIMEX | D - 1116 | 5.9Cummins6BTAA | 00 => 03 | OB1008 | 0986B01008 | | | DB0519(P) | 0986450519 | | |
| DIMEX | | | | | | | | DB0713(S) | 0986450713 | | |
| DIMEX | D - 1422 | 8.3Cummins6CTAA | 00 => 01 | OB1011 | 0986B01011 | | | DB0519(P) | 0986450519 | | |
| DIMEX | | | | | | | | DB0713(S) | 0986450713 | | |
| DIMEX | | | | | | | | RB0581(SR) | 0986450581 | | |
| DIMEX | D - 1622 | 8.3Cummins6CTAA | 99 => 01 | OB1011/OB1043 | 0986B01011/0986B01043 | | | DB0519(P) | 0986450519 | | |
| DIMEX | | | | | | | | DB0713(S) | 0986450713 | | |
| DIMEX | Camiones | | | | | | | | | | |
| DIMEX | D - 1316 | 5.9Cummins6BT | 98 => 99 | OB1008 | 0986B01008 | | | DB0519(P) | 0986450519 | | |
| DIMEX | | | | | | | | DB0713(S) | 0986450713 | | |
| DIMEX | D - 1416 | 5.9Cummins6BTAA | 98 => 03 | OB1008 | 0986B01008 | | | DB0519(P) | 0986450519 | | |
| DIMEX | | | | | | | | DB0519(S) | 0986450519 | | |
| DIMEX | | | | | | | | DB0713(S) | 0986450713 | | |
| DIMEX | D - 1418 | 5.9Cummins6BTA | 98 => 99 | OB1008 | 0986B01008 | | | DB0732(P) | 0986450732 | | |
| DIMEX | | | | | | | | | | | |
| DIMEX | D - 1619 | 5.9Cummins6BTAA | 98 => 99 | OB1008 | 0986B01008 | | | DB0732(P) | 0986450732 | | |
| DIMEX | D - 1625 | 8.3Cummins6CTAA | 98 => 99 | OB1011 | 0986B01011 | | | DB0519(P) | 0986450519 | | |
| DIMEX | | | | | | | | DB0713(S) | 0986450713 | | |
| DIMEX | | | | | | | | DB0714(S) | 0986450714 | | |
| DIMEX | | | | | | | | RB0581(SR) | 0986450581 | | |
| DIMEX | D - 1721 | 5.9Cummins6BTAA | 98 => 01 | OB1008 | 0986B01008 | | | DB0519(P) | 0986450519 | | |
| DIMEX | | | | | | | | DB0713(S) | 0986450713 | | |
| DIMEX | | | | | | | | DB0714(S) | 0986450714 | | |
| DIMEX | | | | | | | | RB0581(SR) | 0986450581 | | |
| DIMEX | D - 1725 | 8.3Cummins6CTAA | 98 => 01 | OB1011/OB1043 | 0986B01011/0986B01043 | | | DB0519(P) | 0986450519 | | |
| DIMEX | | | | | | | | DB0713(S) | 0986450713 | | |
| DIMEX | | | | | | | | DB0714(S) | 0986450714 | | |

| MARCA | VEHÍCULO | MOTOR | FECHA | SC | ACEITE | SC | AIRE | SC | COMBUSTIBLE | SC | HABITÁCULO |
|---|---|---|---|---|---|---|---|---|---|---|---|
| DIMEX | | | | | | | | RB0581(SR) | 0986450581 | | |
| DIMEX | D - 1731 | M11E310 | 97 => 01 | "OB1011/OB1043" | 0986B01011/0986B01043 | | | | | | |
| DIMEX | | | | | | | | | | | |
| DIMEX | | | | | | | | RB0581(SR) | 0986450581 | | |
| DIMEX | D - 1737 | M11E370 | 97 => 01 | "OB1011/OB1043" | 0986B01011/0986B01043 | | | | | | |
| DIMEX | | | | | | | | | | | |
| DIMEX | | | | | | | | RB0581(SR) | 0986450581 | | |
| DIMEX | D - 2730 | 8.3CUMMINS6CTAA | 00 => 01 | "OB1011/OB1043" | 0986B01011/0986B01043 | AB3515(P) | 0986B03515 | DB0519(P) | 0986450519 | | |
| DIMEX | | | | | | | | DB0713(S) | 0986450713 | | |
| DIMEX | | | | | | | | DB0714(S) | 0986450714 | | |
| DIMEX | | | | | | | | RB0582(SR) | 0986450582 | | |
| DIMEX | D - 2737 | M11E370 | | "OB1011/OB1043" | 0986B01011/0986B01043 | AB3515(P) | 0986B03515 | | | | |
| DIMEX | | | | | | | | | | | |
| DIMEX | | | | | | | | | | | |
| DIMEX | D - 9400 | N14435 | | "OB1011/OB1043" | 0986B01011/0986B01043 | | | | | | |
| DIMEX | | | | | | | | | | | |
| EL DETALLE | | | | | | | | | | | |
| EL DETALLE | Omnibus | | | | | | | | | | |
| EL DETALLE | OA 101 | 8.3Cummins6CTAA | 98 => | "OB1011/OB1043" | 0986B01011/0986B01043 | | | DB0731(P) | 0986450731 | | |
| EL DETALLE | | | | | | | | DB0726(BoxSA) | 0986450726 | | |
| EL DETALLE | | | | | | | | DB0224(Elem.SA) | 0986BF0224 | | |
| EL DETALLE | | | | | | | | RB0582(SR) | 0986450582 | | |
| EL DETALLE | OA 104 | | | OB1027 | 0986B01027 | | | | | | |
| EL DETALLE | OA 105 | 8,3Cummins6CTAA | 98 => | "OB1011/OB1043" | 0986B01011/0986B01043 | | | DB0731(P) | 0986450731 | | |
| EL DETALLE | | | | | | | | DB0726(BoxSA) | 0986450726 | | |
| EL DETALLE | | | | | | | | DB0224(Elem.SA) | 0986BF0224 | | |
| EL DETALLE | | | | | | | | RB0582(SR) | 0986450582 | | |
| EL DETALLE | OA 106 | 3.9Cummins4BTA | 00 => | OB1010 | 0986B01010 | AB3535(P) | 0986B03535 | DB0731(P) | 0986450731 | | |
| EL DETALLE | | | | | | AB3904(S) | 0986B03904 | DB0726(BoxSA) | 0986450726 | | |
| EL DETALLE | | | | | | | | DB0224(Elem.SA) | 0986BF0224 | | |
| FIAT AUTO | | | | | | | | | | | |
| FIAT AUTO | Argo | 1.38vFireFly | 03.17 => | | | | | GB0230 | 0986450230 | | |
| FIAT AUTO | Argo | 1.816VE-torque | 03.17 => | OB0702 | 0986B00702 | | | GB0230 | 0986450230 | | |
| FIAT AUTO | 125 - 128 | | => 82 | | | S2111 | 1457432111 | GB0008 | 0986BF0008 | | |
| FIAT AUTO | 128 Super Europa | 1.3 | 83 => | OB0017 | 0986B00017 | AB2002 | 0986B02002 | GB0008 | 0986BF0008 | | |
| FIAT AUTO | 128 Super Europa | 1.5 | 83 => | OB0017 | 0986B00017 | S9953 | 1457429953 | GB0008 | 0986BF0008 | | |
| FIAT AUTO | Nuevo 500 | 1.416vFire(169.A3.000) | 02.09=> | OB0015 | 0986B00015 | | | | | | |
| FIAT AUTO | Nuevo 500 | 1.3JTDFire(169.A1.000) | 01.09=> | | | S0002 | F026400002 | N0001 | 1457070001 | | |
| FIAT AUTO | Barchetta | 1.8i16v | => 99 | OB0013 | 0986B00013 | | | GB0240 | 0986450240 | CB0577 | 0986BF0577 |

| MARCA | VEHÍCULO | MOTOR | FECHA | SC | ACEITE | SC | AIRE | SC | COMBUSTIBLE | SC | HABITÁCULO |
|---|---|---|---|---|---|---|---|---|---|---|---|
| FIAT AUTO | Barchetta Coupe | 2.016v | 03.94 => | | | | | | | | |
| FIAT AUTO | Brava | 1.6i16v | 00 => 02 | OB0013 | 0986B00013 | | | | | CB0505 | 0986BF0505 |
| FIAT AUTO | Brava | 1.9JTDDiesel | | P3354 | 0451103354 | | | N4293 | 1457434293 | CB0505 | 0986BF0505 |
| FIAT AUTO | Bravo | 2.0i-20v | 99 => 01 | | | | | | | CB0505 | 0986BF0505 |
| FIAT AUTO | Bravo | 1.416VMultiair | 09.12 => | P9256 | 1457429256 | | | | | CKB0713 | 0986BF0713 |
| FIAT AUTO | Brio | 1.1-1.3 | | OB0035 | 0986B00035 | AB2002 | 0986B02002 | GB0008 | 0986BF0008 | | |
| FIAT AUTO | Coupe | 2.0i-16v | => 00 | | | S3253 | 1457433253 | | | | |
| FIAT AUTO | Dobló | 1.416vFIRE(843A1.000) | 11.12 => | OB0015 | 0986B00015 | | | | | M2228 | 1987432228 |
| FIAT AUTO | Ducato | 2.5Diesel | => 98 | OB1001 | 0986B01001 | AB3554 | 0986B03554 | DB0732 | 0986450732 | CB0510 | 0986BF0510 |
| FIAT AUTO | Ducato | 2.8Diesel | 98 => 03 | OB1001 | 0986B01001 | AB2282 | 1457432282 | DB0732 | 0986450732 | CB0510 | 0986BF0510 |
| FIAT AUTO | Ducato | 2.8TurboDiesel | 04 => | OB1001 | 0986B01001 | AB2282 | 1457432282 | DB0732 | 0986450732 | CB0510 | 0986BF0510 |
| FIAT AUTO | Ducato | 2.8JTDTurboDiesel | 05 => | OB1001 | 0986B01001 | AB2282 | 1457432282 | N0001 | 1457070001 | CB0510 | 0986BF0510 |
| FIAT AUTO | Ducato | 1.9Diesel | => 03.98 | P3354 | 0451103354 | AB3554 | 0986B03554 | DB0732 | 0986450732 | | |
| FIAT AUTO | Ducato | 1.9Diesel | 04-98 => | OB1001 | 0986B01001 | AB3554 | 0986B03554 | DB0732 | 0986450732 | | |
| FIAT AUTO | Ducato | 2.3Multijet | 01.07 => | | | AB2282 | 1457432282 | N0001 | 1457070001 | CB0510 | 0986BF0510 |
| FIAT AUTO | Duna | 1.6Tipo | 06-94 => | OB0017 | 0986B00017 | AB2305 | 0986B02305 | GB0008 | 0986BF0008 | | |
| FIAT AUTO | Duna | 1.3i | 99 => | OB0013 | 0986B00013 | AB2305 | 0986B02305 | GB0230 | 0986450230 | | |
| FIAT AUTO | Duna | 1.3 S/SC | | OB0017 | 0986B00017 | AB2002 | 0986B02002 | GB0008 | 0986BF0008 | | |
| FIAT AUTO | Duna | 1.3Diesel | 12-89 => | OB0014 | 0986B00014 | AB2345 | 0986B02345 | DB0732 | 0986450732 | | |
| FIAT AUTO | Duna | 1.3Diesel | => 11.89 | OB0014 | 0986B00014 | AB2005 | 0986B02005 | DB0732 | 0986450732 | | |
| FIAT AUTO | Duna | 1.4S | 98 => | OB0017 | 0986B00017 | AB2020 | 0986B02020 | GB0008 | 0986BF0008 | | |
| FIAT AUTO | Duna | 1.4S/SC/SL/SCV/SCLTipo | => 05.94 | OB0017 | 0986B00017 | AB2005 | 0986B02005 | GB0008 | 0986BF0008 | | |
| FIAT AUTO | Duna | 1.5 SCV/SCX | 04.88 =>12.95 | OB0017 | 0986B00017 | S9953 | 1457429953 | GB0008 | 0986BF0008 | | |
| FIAT AUTO | Duna | 1.6S/SC/SL/SCV/SCLTipo | => 05.94 | OB0017 | 0986B00017 | AB2005 | 0986B02005 | GB0008 | 0986BF0008 | | |
| FIAT AUTO | Duna | 1.7Dieselc/bombaCAV | 05-97 => | OB0030 | 0986B00030 | AB2337 | 0986B02337 | DB0309 | 0986BF0309 | | |
| FIAT AUTO | Duna | 1.7Dieselc/bombaCAV | 09-95 => 04-97 | OB0030 | 0986B00030 | AB2338 | 0986B02338 | DB0309 | 0986BF0309 | | |
| FIAT AUTO | Duna | 1.7Dieselc/bombaBosch | 09-95 => 04-97 | OB0030 | 0986B00030 | AB2338 | 0986B02338 | DB0732 | 0986450732 | | |
| FIAT AUTO | Duna | 1.7Dieselc/bombaCAV | => 08.95 | OB0030 | 0986B00030 | AB2338 | 0986B02338 | DB0309 | 0986BF0309 | | |
| FIAT AUTO | Duna | 1.7Dieselc/bombaBosch | => 08.95 | OB0030 | 0986B00030 | AB2338 | 0986B02338 | DB0732 | 0986450732 | | Nolleva |
| FIAT AUTO | Duna Weekend | 1.6-Brasil | 92 => | OB0014 | 0986B00014 | AB2305 | 0986B02305 | GB0008 | 0986BF0008 | | |
| FIAT AUTO | Duna Weekend | 1.6-Brasil | => 91 | OB0017 | 0986B00017 | AB2005 | 0986B02005 | GB0008 | 0986BF0008 | | |
| FIAT AUTO | Fiorino | 1.7Dc/bombaCAV | 05-97 => | OB0014 | 0986B00014 | AB2337 | 0986B02337 | DB0309 | 0986BF0309 | | Nolleva |
| FIAT AUTO | Fiorino | 1.316vFire | 04 => | OB0015 | 0986B00015 | AB2306 | 0986B02306 | GB0018 | 0986BF0018 | | |
| FIAT AUTO | Fiorino | 1.3 | => 12.96 | OB0017 | 0986B00017 | AB2002 | 0986B02002 | GB0008 | 0986BF0008 | | |
| FIAT AUTO | Fiorino | 1.3Diesel | 12-89 => | OB0014 | 0986B00014 | AB2345 | 0986B02345 | DB0732 | 0986450732 | | |
| FIAT AUTO | Fiorino | 1.3Diesel | => 11.89 | OB0014 | 0986B00014 | AB2005 | 0986B02005 | DB0732 | 0986450732 | | |
| FIAT AUTO | Fiorino | 1.3Fire(178E8011) | 10.05 => | OB0013 | 0986B00013 | AB2305 | 0986B02305 | GB0023 | 0986BF0023 | | |
| FIAT AUTO | Fiorino | 1.3 | | OB0013 | 0986B00013 | AB2002 | 0986B02002 | GB0008 | 0986BF0008 | | |
| FIAT AUTO | Fiorino | 1.7Dc/bombaCAV | => 04.97 | OB0030 | 0986B00030 | AB2338 | 0986B02338 | DB0309 | 0986BF0309 | | |

| MARCA | VEHÍCULO | MOTOR | FECHA | SC | ACEITE | SC | AIRE | SC | COMBUSTIBLE | SC | HABITÁCULO |
|---|---|---|---|---|---|---|---|---|---|---|---|
| FIAT AUTO | Fiorino | 1.7Dc/bombaBosch | => 04.97 | OB0030 | 0986B00030 | AB2338 | 0986B02338 | DB0732 | 0986450732 | | |
| FIAT AUTO | Idea 1.4 8v | Fire | 03.07 => | OB0015 | 0986B00015 | AB2306 | 0986B02306 | GB0018 | 0986BF0018 | CB0515 | 0986BF0515 |
| FIAT AUTO | Idea 1.8Flex | | 08.05 => | OB0021 | 0986B00021 | AB2306 | 0986B02306 | GB0018 | 0986BF0018 | CB0515 | 0986BF0515 |
| FIAT AUTO | Idea 1.6 16v | E.TorQ(Sporting/Adventure) | 11.10 => | OB0702 | 0986B00702 | AB2516 | 0986B02516 | GB0018 | 0986BF0018 | CB0515 | 0986BF0515 |
| FIAT AUTO | Linea 1.9 16v | Dualogic/Absolute | 11.08 => | OB0013 | 0986B00013 | AB3570 | 0986B03570 | GB0018 | 0986BF0018 | CB0717 | 0986BF0717 |
| FIAT AUTO | Linea 1.9 16v | LX/HLX/LXDualogic/HLXDualogic) | 01.10 => | OB0013 | 0986B00013 | AB3570 | 0986B03570 | GB0018 | 0986BF0018 | CB0717 | 0986BF0717 |
| FIAT AUTO | Linea 1.8 16v | E-TorQ | 04.11 => | OB0702 | 0986B00702 | AB2516 | 0986B02516 | GB0018 | 0986BF0018 | | |
| FIAT AUTO | Marea | 1.6i | 98 => | OB0013 | 0986B00013 | | | N4314 | 1457434314 | CB0505 | 0986BF0505 |
| FIAT AUTO | Marea | 1.9JTD TurboDiesel | 01 => | P3354 | 0451103354 | | | N4293 | 1457434293 | CB0505 | 0986BF0505 |
| FIAT AUTO | Marea | 1.9TurboDiesel | 98 => 00 | OB0013 | 0986B00013 | | | DB0732 | 0986450732 | CB0505 | 0986BF0505 |
| FIAT AUTO | Marea | 2.0i20v | 05.98 => | P3354 | 0451103354 | | | | | CB0505 | 0986BF0505 |
| FIAT AUTO | Mobi Way | 1.08v Fire | 08.16 => | OB0015 | 0986B00015 | AB2510 | 0986B02510 | GB0024 | 0986BF0024 | | |
| FIAT AUTO | Mobi | 1.08v Fire | 08.16 => | OB0015 | 0986B00015 | AB2510 | 0986B02510 | GB0024 | 0986BF0024 | | |
| FIAT AUTO | Palio | 1.3i16vFire | 01 => | OB0015 | 0986B00015 | AB2306 | 0986B02306 | GB0018 | 0986BF0018 | CB0515 | 0986BF0515 |
| FIAT AUTO | Palio | 1.0 | 00 => | OB0015 | 0986B00015 | AB2306 | 0986B02306 | GB0018 | 0986BF0018 | CB0515 | 0986BF0515 |
| FIAT AUTO | Palio | 1.3iMPI | 99 => 04 | OB0015 | 0986B00015 | AB2306 | 0986B02306 | GB0230 | 0986450230 | CB0515 | 0986BF0515 |
| FIAT AUTO | Palio | 1.6iSPI | 00 => | OB0015 | 0986B00015 | AB2306 | 0986B02306 | GB0230 | 0986450230 | CB0515 | 0986BF0515 |
| FIAT AUTO | Palio | 1.6iSPI8V | 07-98 => 09-00 | OB0013 | 0986B00013 | AB2306 | 0986B02306 | GB0230 | 0986450230 | CB0541 | 0986BF0539 |
| FIAT AUTO | Palio | 1.6iSPI | => 06.98 | OB0013 | 0986B00013 | AB2306 | 0986B02306 | GB0230 | 0986450230 | CB0539 | 0986BF0539 |
| FIAT AUTO | Palio | 1.6i16vTorque | 00 => | OB0015 | 0986B00015 | AB2306 | 0986B02306 | GB0230 | 0986450230 | CB0515 | 0986BF0515 |
| FIAT AUTO | Palio | 1.68VS/EL | 97--> | OB0013 | 0986B00013 | AB2306 | 0986B02306 | GB0230 | 0986450230 | | |
| FIAT AUTO | Palio | 1.6i16vTorque | 07-98 => 09-00 | OB0013 | 0986B00013 | AB2306 | 0986B02306 | GB0230 | 0986450230 | CB0541 | 0986BF0539 |
| FIAT AUTO | Palio | 1.6i16vTorque | => 06.98 | OB0013 | 0986B00013 | AB2306 | 0986B02306 | GB0230 | 0986450230 | CB0539 | 0986BF0539 |
| FIAT AUTO | Palio | 1.6 16vAdventure E-TorQ | 10.10 => | OB0702 | 0986B00702 | AB2516 | 0986B02516 | GB0230 | 0986450230 | CB0515 | 0986BF0515 |
| FIAT AUTO | Palio | 1.6 16vSporting E-TorQ | 04.12 => | OB0702 | 0986B00702 | AB2516 | 0986B02516 | GB0230 | 0986450230 | | |
| FIAT AUTO | Palio | 1.7TurboDiesel | 00 => | P3354 | 0451103354 | AB2306 | 0986B02306 | DB0309 | 0986BF0309 | CB0515 | 0986BF0515 |
| FIAT AUTO | Palio | 1.7TurboDiesel | 98 => 00 | P3354 | 0451103354 | AB2306 | 0986B02306 | DB0309 | 0986BF0309 | CB0541 | 0986BF0539 |
| FIAT AUTO | Palio | 1.7TurboDiesel | => 06.98 | P3354 | 0451103354 | AB2306 | 0986B02306 | DB0309 | 0986BF0309 | CB0539 | 0986BF0539 |
| FIAT AUTO | Palio | 1.7TurboDiesel | => 12.97 | OB0030 | 0986B00030 | AB2306 | 0986B02306 | DB0309 | 0986BF0309 | CB0539 | 0986BF0539 |
| FIAT AUTO | Palio | 1.7TurboDieselWeekend | 01.05 => | P3354 | 0451103354 | AB2306 | 0986B02306 | DB0732 | 0986450732 | CB0539 | 0986BF0539 |
| FIAT AUTO | Palio - Palio Adventure | 1.8i8v | 01.04 => | OB0021 | 0986B00021 | AB2306 | 0986B02306 | GB0018 | 0986BF0018 | CB0515 | 0986BF0515 |
| FIAT AUTO | Palio | 1.48vFire 178F5038 | 04.07 => | OB0015 | 0986B00015 | AB2306 | 0986B02306 | GB0230 | 0986450230 | CB0515 | 0986BF0515 |
| FIAT AUTO | Palio | 1.48vFire 310A2011 | 09.09 => | OB0015 | 0986B00015 | AB2306 | 0986B02306 | GB0230 | 0986450230 | CB0515 | 0986BF0515 |
| FIAT AUTO | Palio | 1.48VRSTII Fire178F5038 | | OB0015 | 0986B00015 | AB2306 | 0986B02306 | GB0230 | 0986450230 | CB0515 | 0986BF0515 |
| FIAT AUTO | Palio | 1.4Groove310A2011 | 05.10 => | OB0015 | 0986B00015 | AB2306 | 0986B02306 | GB0230 | 0986450230 | CB0515 | 0986BF0515 |
| FIAT AUTO | Palio | 1.48VEvoFire | 04.12 => | OB0015 | 0986B00015 | AB2510 | 0986B02510 | GB0230 | 0986450230 | | |
| FIAT AUTO | Palio | 1.88VHLX Fire | 05.04 => | | | | | GB0230 | 0986450230 | | |
| FIAT AUTO | Palio | 1.88v Weekend | 01.05 => | OB0021 | 0986B00021 | AB2306 | 0986B02306 | GB0018 | 0986BF0018 | CB0515 | 0986BF0515 |
| FIAT AUTO | Punto 1.4 GT Turbo | 176A4.000 | 01.94 => 10.96 | | | | | | | | |

| MARCA | VEHÍCULO | MOTOR | FECHA | SC | ACEITE | SC | AIRE | SC | COMBUSTIBLE | SC | HABITÁCULO |
|---|---|---|---|---|---|---|---|---|---|---|---|
| FIAT AUTO | Punto 1.4 8v ELX | 310A2011 | 11.07 => | OB0015 | 0986B00015 | AB3573 | 0986B03573 | GB0018 | 0986BF0018 | CB0717 | 0986BF0717 |
| FIAT AUTO | Punto 1.8 16v HLX | | 11.07 => | OB0021 | 0986B00021 | AB3570 | 0986B03570 | GB0230 | 0986450230 | CB0717 | 0986BF0717 |
| FIAT AUTO | Punto 1.3 JTD | 199A2000 | 08 =>12' | P9256 | 1457429256 | S0002 | F026400002 | | | | |
| FIAT AUTO | Punto 1.3 JTD | 199A2000 | 12 => | P9256 | 1457429256 | S0002 | F026400002 | N2049 | F026402049 | | |
| FIAT AUTO | Punto 1.6 16v | E-TorQ | 02.11=> | OB0702 | 0986B00702 | AB2516 | 0986B02516 | GB0018 | 0986BF0018 | CB0717 | 0986BF0717 |
| FIAT AUTO | Qubo/Fiorino Qubo | 1.48v 350A1000(KFV) | 01.12=> | OB0705 | 0986B00705 | AB2511 | 0986B02511 | | Filtrodeporvida | M2228 | 1987432228 |
| FIAT AUTO | Regatta | 2.0 | | OB0014 | 0986B00014 | | | GB0008 | 0986BF0008 | | |
| FIAT AUTO | Regatta | 1.5 | | OB0017 | 0986B00017 | S9953 | 1457429953 | GB0008 | 0986BF0008 | | |
| FIAT AUTO | Regatta | 1.6 | | OB0014 | 0986B00014 | | | GB0008 | 0986BF0008 | | |
| FIAT AUTO | Regatta | 1.6Tipo | | OB0017 | 0986B00017 | AB2031 | 0986B02031 | GB0008 | 0986BF0008 | | |
| FIAT AUTO | Siena | 1.6iSPI | 00 => | OB0015 | 0986B00015 | AB2306 | 0986B02306 | GB0230 | 0986450230 | CB0515 | 0986BF0515 |
| FIAT AUTO | Siena | 1.3iMPI | 99 => 04 | OB0013 | 0986B00013 | AB2306 | 0986B02306 | GB0230 | 0986450230 | CB0515 | 0986BF0515 |
| FIAT AUTO | Siena | 1.3i16vFire | 01 => | OB0015 | 0986B00015 | AB2306 | 0986B02306 | GB0018 | 0986BF0018 | CB0515 | 0986BF0515 |
| FIAT AUTO | Siena | 1.6iSPI | 07-98 => 09-00 | OB0013 | 0986B00013 | AB2306 | 0986B02306 | GB0230 | 0986450230 | | |
| FIAT AUTO | Siena | 1.6iSPI | => 06.98 | OB0013 | 0986B00013 | AB2306 | 0986B02306 | GB0230 | 0986450230 | CB0539 | 0986BF0539 |
| FIAT AUTO | Siena | 1.6i16vTorque | 00 => | OB0015 | 0986B00015 | AB2306 | 0986B02306 | GB0230 | 0986450230 | CB0515 | 0986BF0515 |
| FIAT AUTO | Siena | 1.6i16vTorque | 07-98 => 09-00 | OB0013 | 0986B00013 | AB2306 | 0986B02306 | GB0230 | 0986450230 | | |
| FIAT AUTO | Siena | 1.6i16vTorque | => 06.98 | OB0013 | 0986B00013 | AB2306 | 0986B02306 | GB0230 | 0986450230 | CB0539 | 0986BF0539 |
| FIAT AUTO | Siena | 1.6i16vE-Torque | 09.10 => | OB0702 | 0986B00702 | AB2516 | 0986B02516 | GB0230 | 0986450230 | CB0515 | 0986BF0515 |
| FIAT AUTO | Siena | 1.7TurboDiesel | 00 => | P3354 | 0451103354 | AB2306 | 0986B02306 | DB0309 | 0986BF0309 | CB0515 | 0986BF0515 |
| FIAT AUTO | Siena | 1.7TurboDiesel | 98 => 00 | P3354 | 0451103354 | AB2306 | 0986B02306 | DB0309 | 0986BF0309 | | |
| FIAT AUTO | Siena | 1.7TurboDiesel | => 06.98 | P3354 | 0451103354 | AB2306 | 0986B02306 | DB0309 | 0986BF0309 | CB0539 | 0986BF0539 |
| FIAT AUTO | Siena | 1.7TurboDiesel | => 12.97 | OB0030 | 0986B00030 | AB2306 | 0986B02306 | DB0309 | 0986BF0309 | CB0539 | 0986BF0539 |
| FIAT AUTO | Siena | 1.8i8v | 01.04 => | OB0021 | 0986B00021 | AB2306 | 0986B02306 | GB0018 | 0986BF0018 | CB0515 | 0986BF0515 |
| FIAT AUTO | Siena | 1.48vFire178F5038 | 04.06 => | OB0015 | 0986B00015 | AB2306 | 0986B02306 | GB0230 | 0986450230 | CB0515 | 0986BF0515 |
| FIAT AUTO | Siena | 1.48vFire178F3011 | 02.09 => | OB0015 | 0986B00015 | AB2306 | 0986B02306 | GB0230 | 0986450230 | CB0515 | 0986BF0515 |
| FIAT AUTO | Siena | 1.48vFire310A2011 | 03.12 => | OB0015 | 0986B00015 | AB2510 | 0986B02510 | GB0230 | 0986450230 | | |
| FIAT AUTO | Grand Siena | 1.6E-Torq (178F4055) | 10.12 => | OB0702 | 0986B00702 | AB2516 | 0986B02516 | GB0230 | 0986450230 | | |
| FIAT AUTO | Spazio | 1.4Tipo | => 05.95 | OB0035 | 0986B00035 | AB2005 | 0986B02005 | GB0008 | 0986BF0008 | | |
| FIAT AUTO | Spazio/147 | 1.1-1.3 (127A201) | => 09.87 | OB0035 | 0986B00035 | AB2002 | 0986B02002 | GB0008 | 0986BF0008 | | Nolleva |
| FIAT AUTO | Spazio | 1.3Diesel | => 11.89 | OB0014 | 0986B00014 | AB2005 | 0986B02005 | DB0732 | 0986450732 | | Nolleva |
| FIAT AUTO | Spazio | 1.3Diesel | 12-89 => | OB0014 | 0986B00014 | AB2345 | 0986B02345 | DB0732 | 0986450732 | | Nolleva |
| FIAT AUTO | Spazio | 1.4Tipo | 06-95 => | OB0035 | 0986B00035 | AB2002 | 0986B02002 | GB0008 | 0986BF0008 | | |
| FIAT AUTO | Stilo | 1.88v | 01.04 => | OB0021 | 0986B00021 | AB2356 | 0986B02356 | GB0018 | 0986BF0018 | CKB0713 | 0986BF0713 |
| FIAT AUTO | Stilo | 1.816v | 01.05 => | P3300 | 0451103300 | S3152 | 1457433152 | | | CKB0713 | 0986BF0713 |
| FIAT AUTO | Stilo | 1.9JTDTurboDiesel | 03 => | OB0013 | 0986B00013 | S3152 | 1457433152 | N4314 | 1457434314 | CKB0713 | 0986BF0713 |
| FIAT AUTO | Strada | 1.316vFire | 04 => | OB0015 | 0986B00015 | AB2306 | 0986B02306 | GB0018 | 0986BF0018 | CB0515 | 0986BF0515 |
| FIAT AUTO | Strada | 1.48vFire | 09.09 => | OB0015 | 0986B00015 | AB2306 | 0986B02306 | | | | |
| FIAT AUTO | Strada | 1.7Diesel-TurboDiesel | 02 => | OB0030 | 0986B00030 | AB2306 | 0986B02306 | DB0309 | 0986BF0309 | CB0515 | 0986BF0515 |

| MARCA | VEHÍCULO | MOTOR | FECHA | SC | ACEITE | SC | AIRE | SC | COMBUSTIBLE | SC | HABITÁCULO |
|---|---|---|---|---|---|---|---|---|---|---|---|
| FIAT AUTO | Strada | 1.8 8v (1v0) | 01.05 => | OB0021 | 0986B00021 | AB2306 | 0986B02306 | GB0018 | 0986BF0018 | CB0515 | 0986BF0515 |
| FIAT AUTO | Strada | 1.4 8v Fire 310A2011 | 09.09 => | | | | | GB0230 | 0986450230 | | |
| FIAT AUTO | Strada | 1.6 16v | 01.98 => | OB0013 | 0986B00013 | AB2306 | 0986B02306 | GB0230 | 0986450230 | | |
| FIAT AUTO | Strada | 1.6 16v Adventure (E-TorQ) | 09.10 => | OB0702 | 0986B00702 | AB2516 | 0986B02516 | GB0230 | 0986450230 | CB0515 | 0986BF0515 |
| FIAT AUTO | Strada | 1.3 16v Multijet | 03.10 => | | | | | | | CB0515 | 0986BF0515 |
| FIAT AUTO | Tempra | 2.0 | | OB0014 | 0986B00014 | | | GB0008 | 0986BF0008 | | |
| FIAT AUTO | Tempra | 2.0i-2.0i 16v | => 97 | OB0014 | 0986B00014 | | | GB0023 | 0986BF0023 | | |
| FIAT AUTO | Tipo | 1.6 MPI | 95 => | OB0013 | 0986B00013 | AB2303 | 0986B02303 | GB0240 | 0986450240 | | |
| FIAT AUTO | Tipo | 1.6 EFI | => 12.94 | OB0017 | 0986B00017 | | | GB0023 | 0986BF0023 | | |
| FIAT AUTO | Tipo | 1.6 ie | 01.94 => | OB0017 | 0986B00017 | | | GB0023 | 0986BF0023 | | |
| FIAT AUTO | Tipo | 1.6 SX | 04.90 => 03.93 | OB0017 | 0986B00017 | | | GB0008 | 0986BF0008 | | |
| FIAT AUTO | Tipo | 1.6 SX | 07.90 => | OB0014 | 0986B00014 | | | GB0008 | 0986BF0008 | | |
| FIAT AUTO | Tipo | 1.6 MPI | 01.95 => | OB0013 | 0986B00013 | | | GB0240 | 0986450240 | | |
| FIAT AUTO | Tipo | 1.6 8v/16v SX | 04.90 => | OB0013 | 0986B00013 | | | | | | |
| FIAT AUTO | Tipo | 1.7 D | = >01.93 | OB0030 | 0986B00030 | AB2303 | 0986B02303 | | | | |
| FIAT AUTO | Toro | 1.6 16v E-torq | 16 | | | | | | | | |
| FIAT AUTO | Uno | 1.0 Fire | | OB0035 | 0986B00035 | AB2020 | 0986B02020 | GB0008 | 0986BF0008 | | |
| FIAT AUTO | Uno | 1.0 (146B4011) | 11.93 =>05.95 | OB0017 | 0986B00017 | AB2305 | 0986B02305 | GB0008 | 0986BF0008 | | |
| FIAT AUTO | Uno | 1.0 MPI 8V mile Fire | 01.00 => | OB0015 | 0986B00015 | AB2305 | 0986B02305 | GB0023 | 0986BF0023 | | |
| FIAT AUTO | Uno | 1.1 146A/B | 10.89 =>12.94 | OB0013 | 0986B00013 | | | | | | |
| FIAT AUTO | Uno | 1.3i Fire | 04 => | OB0015 | 0986B00015 | AB2305 | 0986B02305 | GB0018 | 0986BF0018 | | |
| FIAT AUTO | Uno | 1.3i MPI (178E8011) | 99 => 04 | OB0013 | 0986B00013 | AB2305 | 0986B02305 | GB0023 | 0986BF0023 | | |
| FIAT AUTO | Uno | 1.3i | 01.99=> | OB0013 | 0986B00013 | AB2020 | 0986B02020 | GB0023 | 0986BF0023 | | |
| FIAT AUTO | Uno | 1.3 TD | 09.89 => | OB0030 | 0986B00030 | | | DB0309 | 0986BF0309 | | Nolleva |
| FIAT AUTO | Uno | 1.5 SCV | | OB0017 | 0986B00017 | S9953 | 1457429953 | GB0008 | 0986BF0008 | | |
| FIAT AUTO | Uno | 1.6 SCV/SCR Tipo | 91=>93 | OB0017 | 0986B00017 | AB2005 | 0986B02005 | GB0008 | 0986BF0008 | | Nolleva |
| FIAT AUTO | Uno | 1.7 Diesel c/bomba CAV | 01.95=> 04.97 | OB0030 | 0986B00030 | AB2338 | 0986B02338 | DB0309 | 0986BF0309 | | |
| FIAT AUTO | Uno | 1.7 Diesel c/bomba CAV | 05-97 => | OB0030 | 0986B00030 | AB2337 | 0986B02337 | DB0309 | 0986BF0309 | | |
| FIAT AUTO | Uno | 1.4 Si.e | 01.97 => | OB0017 | 0986B00017 | AB2020 | 0986B02020 | GB0008 | 0986BF0008 | | |
| FIAT AUTO | Uno | 1.4 | => 01 | OB0017 | 0986B00017 | AB2020 | 0986B02020 | GB0008 | 0986BF0008 | | |
| FIAT AUTO | Uno (Way sporting) | 1.4 EVO 8v | 11.10 => | OB0015 | 0986B00015 | AB2510 | 0986B02510 | GB0018 | 0986BF0018 | | |
| FIAT AUTO | Uno Van | 1.3i Fire | | OB0015 | 0986B00015 | AB2306 | 0986B02306 | GB0018 | 0986BF0018 | | |
| FIAT AUTO | Vivace | 1.4 | => 05.95 | OB0035 | 0986B00035 | AB2002 | 0986B02002 | GB0008 | 0986BF0008 | | |
| FIAT AUTO | Vivace | 1.4 | 06-95 => | OB0035 | 0986B00035 | AB2020 | 0986B02020 | GB0008 | 0986BF0008 | | |
| FIAT - AGRITEC | | | | | | | | | | | |
| FIAT - AGRITEC | AGRITEC 120 | | | OB3325 | 0451103325 | | | DB0695 | 0986450695 | | |
| FIAT - AGRITEC | | | | | | | | | | | |
| FIAT - AGRITEC | L 245 | KUBOTA | | | | | | | | | |
| FIAT - AGRITEC | L 295 | KUBOTA | | | | | | | | | |

| MARCA | VEHÍCULO | MOTOR | FECHA | SC | ACEITE | SC | AIRE | SC | COMBUSTIBLE | SC | HABITÁCULO |
|---|---|---|---|---|---|---|---|---|---|---|---|
| FIAT - AGRITEC | LAVERDA M 112 S1 - M112 S2 | | | OB1014 | 0986B01014 | | | DB0695 | 0986450695 | | |
| FIAT - AGRITEC | LAVERDA M 152 | | | OB1014 | 0986B01014 | | | DB0717 | 0986450717 | | |
| FIAT - AGRITEC | VERSATILE 42-43 | | | OB1020 | 0986B01020 | | | | | | |
| FIAT - AGRITEC | VERSATILE 44-28 | | | OB1020 | 0986B01020 | | | | | | |
| FIAT - AGRITEC | VERSATILE 44-33 | | | OB1020 | 0986B01020 | | | | | | |
| FIAT - AGRITEC | VERSATILE 44-35 | | | OB1020 | 0986B01020 | | | | | | |
| FIAT - AGRITEC | 46 - 55 - 66 - 70 - 80 | | | OB1027 | 0986B01027 | | | DB0695 | 0986450695 | | |
| FIAT - AGRITEC | 55 - 56 | 8035.06 | | | | | | DB0732 | 0986450732 | | |
| FIAT - AGRITEC | 70-56 | 8045.06 | | | | | | DB0695 | 0986450695 | | |
| FIAT - AGRITEC | 70-66 | 8045.06 | | | | | | DB0695 | 0986450695 | | |
| FIAT - AGRITEC | 80-55 | N.HOLLAND | | | | AB3513(P) | 0986B03513 | | | | |
| FIAT - AGRITEC | | | | | | AB3905(S) | 0986B03905 | | | | |
| FIAT - AGRITEC | 80-66 | 8045.06 | | | | | | DB0695 | 0986450695 | | |
| FIAT - AGRITEC | 100-90 | 8065.06 | | OB1014 | 0986B01014 | | | DB0732 | 0986450732 | | |
| FIAT - AGRITEC | | | | | | | | | | | |
| FIAT - AGRITEC | 110-90 4WD | 8065.05 | | OB1014 | 0986B01014 | | | DB0732(P) | 0986450732 | | |
| FIAT - AGRITEC | | | | | | | | DB0695(S) | 0986450695 | | |
| FIAT - AGRITEC | 114-90 | | | OB1015 | 0986B01015 | | | DB0717 | 0986450717 | | |
| FIAT - AGRITEC | | | | | | | | | | | |
| FIAT - AGRITEC | 115-80 | | | OB1014 | 0986B01014 | | | DB0695(P) | 0986450695 | | |
| FIAT - AGRITEC | | | | | | | | DB0519(P) | 0986450519 | | |
| FIAT - AGRITEC | 115-90 | | | OB1014 | 0986B01014 | | | DB0695 | 0986450695 | | |
| FIAT - AGRITEC | 140-90 | 8065.25 | | | | AB3535(P) | 0986B03535 | DB0717 | 0986450717 | | |
| FIAT - AGRITEC | | | | | | AB3904(S) | 0986B03904 | | | | |
| FIAT - AGRITEC | 160-90 | 8365.25 | | OB1015 | 0986B01015 | AB3535(P) | 0986B03535 | DB0732(P) | 0986450732 | | |
| FIAT - AGRITEC | | | | | | AB3904(S) | 0986B03904 | DB0717(S) | 0986450717 | | |
| FIAT - AGRITEC | | | | | | | | | | | |
| FIAT - AGRITEC | | | | | | | | | | | |
| FIAT - AGRITEC | 180-90 | 8365.25 | | OB1015 | 0986B01015 | AB3535(P) | 0986B03535 | DB0732(P) | 0986450732 | | |
| FIAT - AGRITEC | | | | | | AB3904(S) | 0986B03904 | DB0717(S) | 0986450717 | | |
| FIAT - AGRITEC | 400 - 400E | | | OB1027 | 0986B01027 | | | | | | |
| FIAT - AGRITEC | 400 | CN3 | | | | | | DB0717 | 0986450717 | | |
| FIAT - AGRITEC | 446 | | | | | | | DB0695 | 0986450695 | | |
| FIAT - AGRITEC | 450 - 650 | | | | | | | DB0696 | 0986450696 | | |
| FIAT - AGRITEC | 480 - 488 | | | OB1027 | 0986B01027 | | | DB0695 | 0986450695 | | |
| FIAT - AGRITEC | 500 | | | OB1027 | 0986B01027 | | | | | | |
| FIAT - AGRITEC | 500 | CN3 | | | | | | DB0717 | 0986450717 | | |
| FIAT - AGRITEC | 540 | | | OB1027 | 0986B01027 | | | DB0695 | 0986450695 | | |
| FIAT - AGRITEC | 600 E | | | OB1027 | 0986B01027 | | | DB0717 | 0986450717 | | |

| MARCA | VEHÍCULO | MOTOR | FECHA | SC | ACEITE | SC | AIRE | SC | COMBUSTIBLE | SC | HABITÁCULO |
|---|---|---|---|---|---|---|---|---|---|---|---|
| FIAT - AGRITEC | | | | | | | | | | | |
| FIAT - AGRITEC | 640 | | | OB1027 | 0986B01027 | | | DB0695 | 0986450695 | | |
| FIAT - AGRITEC | 650 | | | | | | | DB0696 | 0986450696 | | |
| FIAT - AGRITEC | 666 | | | OB1027 | 0986B01027 | | | DB0695 | 0986450695 | | |
| FIAT - AGRITEC | | | | | | | | | | | |
| FIAT - AGRITEC | 680 | | | OB1027 | 0986B01027 | | | DB0695 | 0986450695 | | |
| FIAT - AGRITEC | 700 | | | OB1015 | 0986B01015 | | | DB0696 | 0986450696 | | |
| FIAT - AGRITEC | 700 A | CP3 | | OB1027 | 0986B01027 | | | DB0717 | 0986450717 | | |
| FIAT - AGRITEC | 700 E | CO3 | | OB1027 | 0986B01027 | | | DB0717 | 0986450717 | | |
| FIAT - AGRITEC | 700 U | | 69 => | | | | | DB0696 | 0986450696 | | |
| FIAT - AGRITEC | 780 | | | OB1027 | 0986B01027 | | | DB0695 o DB0696 | 0986450695/0986450696 | | |
| FIAT - AGRITEC | 780 B | | => 72 | | | | | | | | |
| FIAT - AGRITEC | 780 B | | 72 => | | | | | DB0696 | 0986450696 | | |
| FIAT - AGRITEC | 780 R | | 72 => | | | | | DB0696 | 0986450696 | | |
| FIAT - AGRITEC | 780 R | | => 72 | | | | | | | | |
| FIAT - AGRITEC | 800 | | | | | | | DB0717 | 0986450717 | | |
| FIAT - AGRITEC | 800 E | | | OB1027 | 0986B01027 | | | DB0717 | 0986450717 | | |
| FIAT - AGRITEC | 800 F | | | OB1027 | 0986B01027 | | | DB0717 | 0986450717 | | |
| FIAT - AGRITEC | 880 | | | OB1027 /OB1014 | 0986B01027/0986B01014 | | | "DB0695 /DB0732" | 0986450695/0986450732 | | |
| FIAT - AGRITEC | 880-5 | | | OB1015 | 0986B01015 | | | "DB0695 /DB0732" | 0986450695/0986450732 | | |
| FIAT - AGRITEC | 900 | CP3 | | | | | | DB0717 | 0986450717 | | |
| FIAT - AGRITEC | 900 E | | | OB1027 | 0986B01027 | | | DB0717 | 0986450717 | | |
| FIAT - AGRITEC | 980 | | | OB1014 | 0986B01014 | | | DB 0732 (P) | 0986450732 | | |
| FIAT - AGRITEC | | | | | | | | DB0519 (S) | 0986450519 | | |
| FIAT - AGRITEC | | | | | | | | DB0695 (S) | 0986450695 | | |
| FIAT - AGRITEC | 1100 | | | | | | | DB0717 | 0986450717 | | |
| FIAT - AGRITEC | 1100 E | | | OB1027 | 0986B01027 | | | DB0717 | 0986450717 | | |
| FIAT - AGRITEC | 1180 | | | OB1014 | 0986B01014 | | | DB0519 (P) | 0986450519 | | |
| FIAT - AGRITEC | | | | | | | | DB0695 (S) | 0986450695 | | |
| FIAT - AGRITEC | 1355 | | | OB1027 | 0986B01027 | | | | | | |
| FIAT - AGRITEC | 1380 | | | OB1014 | 0986B01014 | | | DB0695 | 0986450695 | | |
| FIAT - AGRITEC | | | | | | | | DB0717 | 0986450717 | | |
| FIAT - AGRITEC | 1380 - 1380 Turbo | | | OB1014 | 0986B01014 | | | DB0717 | 0986450717 | | |
| FIAT - AGRITEC | 1580 | | | OB1015 | 0986B01015 | | | DB0717 | 0986450717 | | |
| FIAT - AGRITEC | 1880 | | | OB1015 | 0986B01015 | | | DB0717 | 0986450717 | | |
| FORD | | | | | | | | | | | |
| FORD | EcoSport | 1.4TDCIDuratorq | 01.03 =>05.11 | OB0711 | 0986B00711 | S3076 | 1457433076 | N6460 | 0450906460 | CB0542 | 0986BF0542 |
| FORD | Ecosport | 2.016v XLTDuratec | 01.03 =>10.13 | OB0003 P9257 | 0986B00003/1457429257 | AB3007 | 0986B03007 | F5939 | 0450905939 | CB0542 | 0986BF0542 |
| FORD | Ecosport | 1.68v ZetecRocam1.6(CDJC) | 01.03 =>10.13 | OB0003 | 0986B00003 | AB2325 | 0986B02325 | GB0025 | 0986BF0025 | CB0542 | 0986BF0542 |

| MARCA | VEHÍCULO | MOTOR | FECHA | SC | ACEITE | SC | AIRE | SC | COMBUSTIBLE | SC | HABITÁCULO |
|---|---|---|---|---|---|---|---|---|---|---|---|
| FORD | Ecosport 2 KD | 1.6 16vSigma | 10.12 => | OB0063 | 0986B00063 | AB2512 | 0986B02512 | GB0018 | 0986BF0018 | CB0589 | 0986BF0589 |
| FORD | Ecosport 2 KD | 2.0 16vDuratec(4x2) | 10.12 => | OB0063 | 0986B00063 | | | GB0018 | 0986BF0018 | CB0589 | 0986BF0589 |
| FORD | Ecosport 2 KD | 1.5dciDuratorq | 10.12 => | OB0711 | 0986B00711 | AB2512 | 0986B02512 | | | CB0589 | 0986BF0589 |
| FORD | Escape | 2.0i16vZetec | 00 => 03 | OB0003 | 0986B00003 | | | GB0026 | 0986BF0026 | | |
| FORD | Escort | 1.6 | => 90 | | | | | GB0008 | 0986BF0008 | | Nolleva |
| FORD | Escort Cabrio 1.8 16v LX/CLX | Zetec | 01.96 => | OB3322 | 0451103322 | | | | | | |
| FORD | Escort VII 1.6 16v Cros | Zetec | 01.99 => | OB3322 | 0451103322 | | | | | | |
| FORD | Escort VII 1.8 16v SI | ZetecE | 07.98 => | OB3322 | 0451103322 | | | | | | |
| FORD | Escort | 1.6 | 90 => 92 | OB0057 | 0986B00057 | AB2009 | 0986B02009 | GB0008 | 0986BF0008 | | Nolleva |
| FORD | Escort | 1.6Audi | 93 => | OB0018 | 0986B00018 | AB2307 | 0986B02307 | GB0008 | 0986BF0008 | | Nolleva |
| FORD | Escort | 1.8/1.8i-2.0/2.0iAudi | => 95 | OB0018 | 0986B00018 | AB2307 | 0986B02307 | GB0239 | 0986450239 | | |
| FORD | Escort | 1.6iZetec | 99 => 03 | OB0003 | 0986B00003 | AB2319 | 0986B02319 | GB0026 | 0986BF0026 | | |
| FORD | Escort | 1.8i16vZetec | 96 => 03 | OB0003 | 0986B00003 | AB2319 | 0986B02319 | GB0026 | 0986BF0026 | | |
| FORD | Escort | 1.8KentDiesel | 96 => 03 | OB0033 | 0986B00033 | AB2319 | 0986B02319 | DB0851 | 0986450851 | | |
| FORD | Escort | 1.8EnduraED | 99 => 03 | OB0033 | 0986B00033 | AB2319 | 0986B02319 | "DB0695/DB0306" | 0986450695/0986BF0306 | | |
| FORD | Escort | 1.8EnduraTurboDiesel | 99 => 03 | OB0033 | 0986B00033 | AB2319 | 0986B02319 | "DB0695/DB0306" | 0986450695/0986BF0306 | | |
| FORD | Explorer | 4.0iV6 | 98 => 01 | OB3325 | 0451103325 | | | GB0239 | 0986450239 | | |
| FORD | Explorer | 4.0iV6 | 95 => 97 | OB3325 | 0451103325 | AB9602 | 1987429602 | GB0026 | 0986BF0026 | | |
| FORD | Falcon | 2.3 | 82 => | | | | | GB0008 | 0986BF0008 | | |
| FORD | Falcon | 3.0-3.6 | => 81 | OB3325 | 0451103325 | | | GB0008 | 0986BF0008 | | |
| FORD | Falcon | 3.0-3.6 | 82 => | OB3325 | 0451103325 | AB2034 | 0986B02034 | GB0008 | 0986BF0008 | | |
| FORD | Fiesta | 1.3i Endura | 96 => 99 | OB3321 | 0451103321 | AB2502 | 0986B02502 | | | CB0513 | 0986BF0513 |
| FORD | Fiesta | 1.3i | 11.95=>12.2002 | OB3322 | 0451103322 | S3605 | 1457433605 | F5324 | 0450905324 | CB0513 | 0986BF0513 |
| FORD | Fiesta V | 1.4TDCIF6JA | 03.02 => | OB0711 | 0986B00711 | S3076 | 1457433076 | N6460 | 0450906460 | CB0542 | 0986BF0542 |
| FORD | Fiesta Max | 1.4TDCI | 01.05 => | OB0711 | 0986B00711 | S3076 | 1457433076 | N6460 | 0450906460 | | |
| FORD | Fiesta | 1.4i16vZetec | => 99 | OB3321 | 0451103321 | AB2320 | 0986B02320 | GB0026 | 0986BF0026 | CB0513 | 0986BF0513 |
| FORD | Fiesta | 1.6iRocam | 09-04 => | OB0003 | 0986B00003 | AB2325 | 0986B02325 | GB0025 | 0986BF0025 | CB0542 | 0986BF0542 |
| FORD | Fiesta IV | 1.6 16vLX/CLX/CLXSport Zetec | 01.00 => | OB3322 | 0451103322 | | | F5324 | 0450905324 | CB0513 | 0986BF0513 |
| FORD | Fiesta V | 1.68vZetec | 08.02 => | OB0003 | 0986B00003 | AB2325 S3605 | | GB0025 | 0986BF0025 | CB0542 | 0986BF0542 |
| FORD | Fiesta | 1.6iRocam | 02 => 08-04 | OB3321 | 0451103321 | AB2325 | 0986B02325/1457433605 | GB0025 | 0986BF0025 | CB0542 | 0986BF0542 |
| FORD | Fiesta | 1.6iRocam | 99 => 02 | OB0003 | 0986B00003 | AB2320 | 0986B02325 | GB0026 | 0986BF0026 | CB0513 | 0986BF0513 |
| FORD | Fiesta IV | 1.8DEnduraDE | 96 => 02 | OB0033 | 0986B00033 | AB2320 | 0986B02320 | DB0306 | 0986BF0306 | CB0513 | 0986BF0513 |
| FORD | Fiesta III | 1.8DieselKent | 95 => | OB0033 | 0986B00033 | S3711 | 0986B02320 | DB0306 | 0986BF0306 | | |
| FORD | Fiesta | 1.8DieselKent | => 94 | OB0033 | 0986B00033 | | 1457433711 | DB0306 | 0986BF0306 | | |
| FORD | Fiesta IV 1.8D | RTJ/RTK | 01.96 => 05.00 | OB0033 | 0986B00033 | S3605 | | DB0306 | 0986BF0306 | CB0513 | 0986BF0513 |
| FORD | Fiesta VI Kinetic Design | 1.6Ti.VCTDuratecSigma | 10 => | OB0512 | 0986B00512 | AB2512 | 1457433605 | | | CB0589 | 0986BF0589 |
| FORD | Fiesta | 1.6LDuratecSigmaDOHCTIVCT | 11.13 => | OB0512 | 0986B00512 | AB2512 | 0986B02512 | GB0018 | 0986BF0018 | | |
| FORD | Focus | 1.8i16vZetec | 99 => | OB0003 | 0986B00003 | AB2323 | 0986B02512 | F5939 | 0450905939 | CB0524 | 0986BF0524 |
| FORD | Focus | 1.8TurboDieselLynx | 99 => | OB1035 | 0986B01035 | AB2323 | 0986B02323 | N6357 | 0450906357 | CB0524 | 0986BF0524 |

| MARCA | VEHÍCULO | MOTOR | FECHA | SC | ACEITE | SC | AIRE | SC | COMBUSTIBLE | SC | HABITÁCULO |
|---|---|---|---|---|---|---|---|---|---|---|---|
| FORD | Focus | 1.8DIBHDA-BHDB | 10.99 => 12.04 | OB0003 | 0986B00003 | AB2323 | 0986B02323 | F5939 | 0450905939 | CB0524 | 0986BF0524 |
| FORD | Focus | 1.8TDDIC9DA/B/C | 09/98 => 12.04 | OB1035 | 0986B01035 | AB2323 | 0986B02323 | N6357 | 0450906357 | CB0524 | 0986BF0524 |
| FORD | Focus | 1.6iRocam(FYDA) | 10.04 =>12.10 | OB0003 | 0986B00003 | AB2323 | 0986B02323 | F5939 | 0450905939 | CB0524 | 0986BF0524 |
| FORD | Focus | 2.0i16vDuratec | 04 => | OB0003 | 0986B00003 | AB2323 | 0986B02323 | F5939 | 0450905939 | CB0524 | 0986BF0524 |
| FORD | Focus | 2.0i16vZetec | 02.00 =>10.03 | OB0057 | 0986B00057 | AB2323 | 0986B02323 | F5939 | 0450905939 | CB0524 | 0986BF0524 |
| FORD | Focus II | 1.8TDCIKKDA | 08.08 => | P7017 | F026407017 | AB2041 | 0986B02323 | N2007 | F026402007 | M2113 | 1987432113 |
| FORD | Focus II | 1.8TDCIDuratorq | 05.05 => | OB1035 | 0986B01035 | AB2323 | 0986B02041 | N6508 | 0450906508 | M2113 | 1987432113 |
| FORD | Focus II | 1.8TDI | 01.04 => | OB1035 | 0986B01035 | AB2323 | 0986B02323 | N6357 | 0450906357 | CB0524 | 0986BF0524 |
| FORD | | | | | | | 0986B02323 | DB0234 | 0986BF0234 | | |
| FORD | Focus II | 2.016vDuratec | 11.04 => | P3363 | 0451103363 | AB2323 | | F3009 | F026403009 | M2113 | 1987432113 |
| FORD | | | | P7017 | F026407017 | | 0986B02323 | | | | |
| FORD | Focus II | 2.016vDuratecHE | 08.08 => | P3363 | 0451103363 | AB2041 | | F3009 | F026403009 | M2113 | 1987432113 |
| FORD | Focus II | 1.6 16VSigma | 03.10 => | OB0512 | 0986B00512 | AB2041 | 0986B02041 | F3009 | F026403009 | M2113 | 1987432113 |
| FORD | Focus III | 1.6Ti-VCTZetec-S | 08.13 => | OB0512 | 0986B00512 | AB2041 | 0986B02041 | | Filtro de por vida | M5018 | 1987435018 |
| FORD | Focus III | 2.0 I4DITIVCT | 08.13 => | OB0063 | 0986B00063 | AB2041 | 0986B02041 | GB0018 | 0986BF0018 | M5018 | 1987435018 |
| FORD | Galaxy | 1.8-2.0Audi | | OB0018 | 0986B00018 | AB2307 | 0986B02041 | GB0008 | 0986BF0008 | | |
| FORD | Galaxy | 1.8i-2.0iAudi | | OB0018 | 0986B00018 | AB2307 | 0986B02307 | GB0239 | 0986450239 | | |
| FORD | Ka | 1.0iRocam | 00 => | OB3321 | 0451103321 | AB2322 | 0986B02307 | GB0026 | 0986BF0026 | CB0513 | 0986BF0513 |
| FORD | Ka | 1.0iEndura | => 99 | OB3321 | 0451103321 | AB2321 | 0986B02322 | GB0026 | 0986BF0026 | CB0513 | 0986BF0513 |
| FORD | Ka | 1.3iEndura | 97 => 99 | OB3321 | 0451103321 | "AB2320/AB2321" | 0986B02321 | | | CB0513 | 0986BF0513 |
| FORD | Ka | 1.6iRocam | 99 => | OB3321 | 0451103321 | AB2322 | 0986B02320/0986B02321 | GB0026 | 0986BF0026 | CB0513 | 0986BF0513 |
| FORD | Ka II (Pulse/Top Pulse) | 1.6L8VZetecRocam | 08.08 => | OB0003 | 0986B00003 | AB2325 | 0986B02322 | GB0026 | 0986BF0026 | CB0513 | 0986BF0513 |
| FORD | Ka II (Fly/Fly Plus) | 1.0L8VZetecRocam | 08.08 => | OB3321 | 0451103321 | AB2325 | 0986B02325 | GB0026 | 0986BF0026 | CB0513 | 0986BF0513 |
| FORD | Ka III | 1.5TiVct(DuratecSigma) | 02.16 => | OB0512 | 0986B00512 | AB2512 | 0986B02325 | GB0018 | 0986BF0018 | CB0589 | 0986BF0589 |
| FORD | Kuga | 2.0TDCI DuratorqDI | 05.08 => | OB0705 | 0986B00705 | AB2041 | 0986B02512 | N1723 | 1457431723 | | |
| FORD | Kuga | 2.5Turbo | 12.09 => | P9244 | 1457429244 | S3583 | 0986B02041 | | | | |
| FORD | Kuga II | 1.6GTDiEcoboost150cv(4X2/4X4) | 09.13 => | OB0512 | 0986B00512 | AB2041 | 1457433583 | | | M5018 | 1987435018 |
| FORD | Kuga II | 1.6GTDiEcoboost180cv(4X4) | 09.13 => | OB0512 | 0986B00512 | AB2041 | 0986B02041 | | | M5018 | 1987435018 |
| FORD | Mondeo | 1.8i16vZetec | 95 => 09-00 | OB0003 | 0986B00003 | | 0986B02041 | F5324 | 0450905324 | | |
| FORD | Mondeo | 1.8TurboDieselEndura | 95 => 09-00 | OB0033 | 0986B00033 | "S3608/S9078" | 1457433608/1457429078 | "DB0695/DB0851/DB0306" | 0986450695 /0986450851/0986BF0306 | | |
| FORD | Mondeo II 1.8 16v | | => 12.00 | OB3322 | 0451103322 | | | F5324 | 0450905324 | | |
| FORD | Mondeo II 2.0i 16v Ghia | Zetec | 03.97 => | OB3322 | 0451103322 | | | F5324 | 0450905324 | | |
| FORD | Mondeo 2.0 8v | DuratecHE | 01.02 => | P9257 P3363 | 1457429257/0451103363 | S3047 | 1457433047 | F5927 | 0450905927 | | |
| FORD | Mondeo | 2.016vTDCiDuratorq | 01 => | | | | | N6508 | 0450906508 | | |
| FORD | Mondeo 2.0 TDCi | FMBA/N7BA | 09.01 => 03.07 | P9239 | 1457429239 | S3047 | 1457433047 | N6508 | 0450906508 | | |
| FORD | Mondeo | 2.016vDuratec | 10-00 => | P3363 | 0451103363 | | | | | | |
| FORD | Mondeo | 2.0i16vZetec | 95 => 09-00 | OB0003 | 0986B00003 | | | F5324 | 0450905324 | | |
| FORD | Mondeo | 1.8TDCIDuratorq | 04.07 => | P9257 | 1457429257 | S3047 | 1457433047 | N2007 | F026402007 | | |
| FORD | Mondeo | 2.2TDCiDuratorq | 06 => | | | | | | | | |

| MARCA | VEHÍCULO | MOTOR | FECHA | SC | ACEITE | SC | AIRE | SC | COMBUSTIBLE | SC | HABITÁCULO |
|---|---|---|---|---|---|---|---|---|---|---|---|
| FORD | Mondeo | 2.2TDCi 9JBA/9JBB | 09.04 => 03.07 | P9239 | 1457429239 | S3047 | 1457433047 | N6508 | 0450906508 | | |
| FORD | Mondeo | 2.5V6 24vDuratec | 10-00 => | P3333 | 0451103333 | S3047 | 1457433047 | F5324 | 0450905324 | | |
| FORD | Mondeo | 2.5iV6Duratec | 95 => 09-00 | P3333 | 0451103333 | S3047 | 1457433047 | F5324 | 0450905324 | | |
| FORD | Mondeo | 2.5 | 04.07 => | P9244 | 1457429244 | S3583 | 1457433583 | | | | |
| FORD | Mondeo | 3.0V6Duratec | 05 => | P3333 | 0451103333 | S3047 | 1457433047 | | | | |
| FORD | Mondeo III 2.0 TD Ghia | 2.0TDGhiaDuratorqDI | 01.02 => | P9257 | 1457429257 | S3047 | 1457433047 | N6376 | 0450906376 | | |
| FORD | Mondeo III 2.0 8V Ghia | DuratecHE | 01.02 => | P9257 | 1457429257 | S3047 | 1457433047 | F5927 | 0450905927 | | |
| FORD | | | | P3363 | 0451103363 | | | | | | |
| FORD | Mondeo III 2.5 V6 | DuratecLCBD | 11.00 => 03.07 | P3333 | 0451103333 | S3047 | 1457433047 | F5927 | 0450905927 | | |
| FORD | Mondeo III 2.5 V6 Ghia | Duratec | 01.02 = > | P3333 | 0451103333 | S3047 | 1457433047 | F5927 | 0450905927 | | |
| FORD | Mondeo III 3.0 ST 220 | MEBA | 09.01 = > 03.07 | P3333 | 0451103333 | S3047 | 1457433047 | F5927 | 0450905927 | | |
| FORD | Mondeo III 3.0 V6 | REBA | 08.04 = > 03.07 | P3333 | 0451103333 | S3047 | 1457433047 | F5927 | 0450905927 | | |
| FORD | Mondeo III 1.8 TDCI | Duratorq | 08.07 =>11.09 | P9257 | 1457429257 | S3047 | 1457433047 | N2007 | F026402007 | | |
| FORD | | | | | | | | N6376 | 0450906376 | | |
| FORD | Mondeo IV | 2.0TDCI DuratorqDI | 09.09 => | OB0705 | 0986B00705 | S0109 | F026400109 | | | | |
| FORD | Mondeo IV | 2.316v | 10.07 => 06.10 | P9257 | 1457429257 | S0109 | F026400109 | | | | |
| | Mondeo IV | 2.0EcoBoostSCTi | 11.11 => | OB0063 | 0986B00063 | S0109 | F026400109 | | | | |
| FORD | Orion | 1.6GL | 02.93 => 07.98 | OB3321 | 0451103321 | S9775 | 1457429775 | | | | Nolleva |
| FORD | Orion | 1.8i | | OB0018 | 0986B00018 | AB2307 | 0986B02307 | GB0239 | 0986450239 | | |
| FORD | Orion | 2.0i | 04.07 => | OB0018 | 0986B00018 | AB2307 | 0986B02307 | GB0239 | 0986450239 | | |
| FORD | Ranchero | 3.0 | 82 => | OB3325 | 0451103325 | AB2034 | 0986B02034 | GB0008 | 0986BF0008 | | |
| FORD | Ranchero Diesel | | | | | AB3506 | 0986B03506 | | | | |
| FORD | Ranger | 2.3iV6 | 01.95 => | OB3325 | 0451103325 | | | GB0239 | 0986450239 | | |
| FORD | Ranger | 2.3i16v | 01.01 => | OB0003 | 0986B00003 | AB9602 | 1987429602 | | | | |
| FORD | Ranger | 2.5MaxionTurboDiesel | 06-00 => 01 | OB1026 | 0986B01026 | AB2287 | 1457432287 | " DB0712/DB0732" | 0986450712/0986450732 | | |
| FORD | Ranger | 2.5MaxionTurboDiesel | 99 => | OB1026 | 0986B01026 | AB3544 | | DB0712 | 0986450712 | | |
| FORD | Ranger | 2.5MaxionTurboDiesel | 98 => | OB1026 | 0986B01026 | AB2287 | 1457432287 | DB0732 | 0986450732 | | |
| FORD | Ranger | 2.58VXL | 98 => 01 | | | AB9602 | 1987429602 | GB0026 | 0986BF0026 | | |
| FORD | Ranger | 2.8TurboDieselPowerStroke | 01 => 03 | OB1026 | 0986B01026 | AB2287 | 1457432287 | DB0712 | 0986450712 | | |
| FORD | Ranger | 2.8TurboDieselPowerStroke | 04 => | OB1026 | 0986B01026 | AB2287 | 1457432287 | DB0401 | 0986BF0401 | | |
| FORD | Ranger | 3.0TDI16vPowerStroke | 05 =>09 | OB1576 | 0986B01576 | AB3566 | 0986B03566 | DB0315 | 0986BF0315 | | |
| FORD | Ranger | | 08=> | OB0055 | 0986B00055 | | | | | | |
| FORD | Ranger | 4.0iV6 | 98 => 01 | OB1026 | 0986B01026 | AB9602 | 1987429602 | GB0026 | 0986BF0026 | | |
| FORD | Ranger | 4.0iV6 | => 98 | OB1026 | 0986B01026 | | | | | | |
| FORD | Ranger 2 | 2.5NDuratec | 08.12=> | OB0063 | 0986B00063 | AB3013 | 0986B03013 | GB0018 | 0986BF0018 | CB0637 | 0986BF0637 |
| FORD | Ranger 2 | 2.2TDCI(Duratorq) | 08.12=> | OB0712 | 0986B00712 | AB3013 | 0986B03013 | DB0247 | 0986BF0247 | CB0637 | 0986BF0637 |
| FORD | Ranger 2 | 3.2TDCI(Duratorq) | 08.12=> | OB0712 | 0986B00712 | AB3013 | 0986B03013 | DB0247 | 0986BF0247 | CB0637 | 0986BF0637 |
| FORD | S-Max | 1.8TDCIDuratorq | 12.07 => | P7017 | F026407017 | S0109 | F026400109 | N2007 | F026402007 | | |
| FORD | S-Max | 2.3DuratecHE | 02.08 => | P9257 | 1457429257 | S0109 | F026400109 | | | | |

| MARCA | VEHÍCULO | MOTOR | FECHA | SC | ACEITE | SC | AIRE | SC | COMBUSTIBLE | SC | HABITÁCULO |
|---|---|---|---|---|---|---|---|---|---|---|---|
| FORD | S-Max | 2.0 Duratec-HE (AODA) | 03.10 => | OB0063 | 0986B00063 | S0109 | F026400109 | | | | |
| FORD | Sierra | 1.6 | 02.84 =>05.92 | OB0057 | 0986B00057 | S9954 | 1457429954 | GB0008 | 0986BF0008 | | Nolleva |
| FORD | Sierra | 2.3 | 02.84 =>10.95 | | | | | GB0008 | 0986BF0008 | | |
| FORD | Transit | 2.5D | 98 => 00 | OB1035 | 0986B01035 | S3792 | 1457433792 | | | | |
| FORD | Transit | 2.4 16VTDI Duratorq | 01.01 => | OB0500 | 0986B00500 | | | | | | |
| FORD | Transit | 2.5 TD Maxion Furgon | 10.96 => | OB1035 | 0986B01035 | AB2340 | 0986B02340 | | | | |
| FORD | Transit | 2.5 TDE Maxion Furgon BUS | 98 => | OB1035 | 0986B01035 | AB2340 | 0986B02340 | | | | |
| FORD | Transit | 2.4 TDCi (Puma) | 11.10 => | P9239 | 1457429239 | AB2042 | 0986B02042 | | | | |
| FORD | Transit | 2.2 L TDCi (Puma) | 06.12 => | OB0705 | 0986B00705 | AB2042 | 0986B02042 | | | | |
| FORD | Comerciales | | | | | | | | | | |
| FORD | | | | | | | | | | | |
| FORD | Cargo 712 | Cummins B3,9 120 P5 | 04.07 => | OB0511 | 0986B00511 | AB3531 (P) | 0986B03531 | DB0368 | 0986BF0368 | | |
| FORD | | | | HB1652 (DH) | 0986B01652 | AB3904 (S) | 0986B03904 | DB0235 (C/vaso) | 0986BF0235 | | |
| FORD | | | | | | | | DB0350 | 0986BF0350 | | |
| FORD | Cargo 814 | 3.9 Cummins 4BTAA | => 98 | OB1008 | 0986B01008 | AB3531 (P) | 0986B03531 | DB0519 | 0986450519 | | |
| FORD | | | | HB1652 (DH) | 0986B01652 | AB3904 (S) | 0986B03904 | | | | |
| FORD | Cargo 915 | 3.9 Cummins 4BTAA | 09.02 =>12.06 | OB1010 | 0986B01010 | AB3531 (P) | 0986B03531 | DB0731 | 0986450731 | | |
| FORD | | | | HB1652 (DH) | 0986B01652 | AB3904 (S) | 0986B03904 | | | | |
| FORD | Cargo 915 E Turbo | Cummins 4BTAA | 01.07 => | OB0511 | 0986B00511 | AB3531 (P) | 0986B03531 | DB0368 | 0986BF0368 | | |
| FORD | | | | HB1652 (DH) | 0986B01652 | AB3904 (S) | 0986B03904 | DB0235 (C/vaso) | 0986BF0235 | | |
| FORD | | | | | | | | DB0350 | 0986BF0350 | | |
| FORD | Cargo 914 | 3.9 Cummins 4BTAA | 99 => | OB1010 | 0986B01010 | AB3531 (P) | 0986B03531 | DB0519 | 0986450519 | | |
| FORD | | | | HB1652 (DH) | 0986B01652 | AB3904 (S) | 0986B03904 | DB0726 (Box SA) | 0986450726 | | |
| FORD | | | | | | | | RB0582 (SR) | 0986450582 | | |
| FORD | Cargo 1121 | Cummins BBT 5.9 | 01.02 => | OB1008 | 0986B01008 | AB3003 (P) | 0986B03003 | DB0713 | 0986450713 | | |
| FORD | | | | | | AB3406 (S) | 0986B03406 | DB0217 (Elem.SA) | 0986BF0217 | | |
| FORD | | | | HB1652 (DH) | 0986B01652 | AB3406 (S) | 0986B03406 | DB0217 (Elem.SA) | 0986BF0217 | | |
| FORD | Cargo 1215 | 5.9 Cummins 6BT | | OB1008 | 0986B01008 | AB3519 (P) | 0986B03519 | DB0726 (Box SA) | 0986450726 | | |
| FORD | | | | HB1652 (DH) | 0986B01652 | | | DB0519 (S) | 0986450519 | | |
| FORD | Cargo 1217 | Cummins 6T 5.9 | 01.02 => | OB1008 | 0986B01008 | AB3003 (P) | 0986B03003 | DB0713 | 0986450713 | | |
| FORD | | | | HB1652 (DH) | 0986B01652 | AB3406 (S) | 0986B03406 | DB0217 (Elem.SA) | 0986BF0217 | | |
| FORD | Cargo 1317 | Cummins 6BTAA 5.9 | 01.02 => | HB1652 (DH) | 0986B01652 | | | DB0519 DB0217 | 0986450519/0986BF0217 | | |
| FORD | | | | | | | | RB0582 (SR) | 0986450582 | | |
| FORD | | | | | | | | DB0726 (Box SA) | 0986450726 | | |
| FORD | Cargo 1317E | CUMMINS 6B 5.9 | 01.07 => | OB0511 | 0986B00511 | AB3008 | 0986B03008 | DB0368 | 0986BF0368 | | |
| FORD | Cargo 1317E | | | HB1652 (DH) | 0986B01652 | | | DB0224 (Elem.SA) | 0986BF0224 | | |
| FORD | Cargo 1317E | | | RB0582 (SR) | 0986450582 | | | DB0726 (Box SA) | 0986450726 | | |
| FORD | Cargo 1416 | 5.9 Cummins 6BT | 02 => 03 | OB1008 | 0986B01008 | AB3519 (P) | 0986B03519 | DB0726 (Box SA) | 0986450726 | | |
| FORD | | | | HB1652 (DH) | 0986B01652 | | | DB0519 (S) | 0986450519 | | |

| MARCA | VEHÍCULO | MOTOR | FECHA | SC | ACEITE | SC | AIRE | SC | COMBUSTIBLE | SC | HABITÁCULO |
|---|---|---|---|---|---|---|---|---|---|---|---|
| FORD | Cargo 1416 | 5.9Cummins6BT | 95 => 01-99 | OB1008 | 0986B01008 | AB3519(P) | 0986B03519 | DB0713(P) | 0986450713 | | |
| FORD | | | | HB1652(DH) | 0986B01652 | | | DB0519(S) | 0986450519 | | |
| FORD | Cargo 1417 | Cummins6CT5.9 | 01.02 => | OB1008 | 0986B01008 | AB3003(P) | 0986B03003 | DB0713 | 0986450713 | | |
| FORD | | | | HB1652(DH) | 0986B01652 | AB3406(S) | 0986B03406 | DB0217(Elem.SA) | 0986BF0217 | | |
| FORD | Cargo 1421 | Cummins6CT5.9 | 01.02 => | OB1008 | 0986B01008 | AB3003(P) | 0986B03003 | DB0713 | 0986450713 | | |
| FORD | | | | HB1652(DH) | 0986B01652 | AB3406(S) | 0986B03406 | DB0217(Elem.SA) | 0986BF0217 | | |
| FORD | Cargo 1517 | 5.9Cummins6BT | 03 => | OB1008 | 0986B01008 | AB3008 | 0986B03008 | DB0519 | 0986450519 | | |
| FORD | | | | HB1652(DH) | 0986B01652 | | | DB0224(Elem.SA) | 0986BF0224 | | |
| FORD | Cargo 1517 E | Cummins6BTAA | 01.07 => | OB0511 | 0986B00511 | AB3008 | 0986B03008 | DB0368 | 0986BF0368 | | |
| FORD | Cargo 1517 E | | | HB1652(DH) | 0986B01652 | | | RB0582(SR) | 0986450582 | | |
| FORD | | | | | | | | DB0224(Elem.SA) | 0986BF0224 | | |
| FORD | | | | | | | | DB0726(BoxSA) | 0986450726 | | |
| FORD | Cargo 1617 | Cummins6CT5.9 | 01.02 => | OB1008 | 0986B01008 | AB3003(P) | 0986B03003 | DB0713 | 0986450713 | | |
| FORD | | | | HB1652(DH) | 0986B01652 | AB3406(S) | 0986B03406 | DB0217(Elem.SA) | 0986BF0217 | | |
| FORD | Cargo 1622 | Cummins6CTAA | 01.98 => | "OB1011/OB1043" | 0986B01011/0986B01043 | | | DB0726(BoxSA) | 0986450726 | | |
| FORD | | | | HB1652(DH) | 0986B01652 | | | | | | |
| FORD | Cargo 1716 | | => 02 | | | | | | | | |
| FORD | Cargo 1716 | 5.9Cummins6BT | 95 => 01-99 | OB1008 | 0986B01008 | AB3519(P) | 0986B03519 | DB0713(P) | 0986450713 | | |
| FORD | | | | HB1652(DH) | 0986B01652 | | | DB0519(S) | 0986450519 | | |
| FORD | Cargo 1721 | 5.9Cummins6BT | 98 => 02 | OB1008 | 0986B01008 | AB3519 | 0986B03519 | DB0728(P) | 0986450728 | | |
| FORD | | | | HB1652(DH) | 0986B01652 | | | DB0519(S) | 0986450519 | | |
| FORD | | | | | | | | DB0726(BoxSA) | 0986450726 | | |
| FORD | | | | | | | | RB0582(SR) | 0986450582 | | |
| FORD | Cargo 1722 | 8.3Cummins6CT | 01 => | "OB1011/OB1043" | 0986B01011/0986B01043 | | | DB0726(BoxSA) | 0986450726 | | |
| FORD | | | | | | | | DB0519(S) | 0986450519 | | |
| FORD | Cargo 1722 | 8.3Cummins6CTAA | 01.04 => | "OB1011/OB1043" | 0986B01011/0986B01043 | AB3003(P) | 0986B03003 | DB0728(P) | 0986450728 | | |
| FORD | | | | HB1652(DH) | 0986B01652 | AB3406(S) | 0986B03406 | DB0726(BoxSA) | 0986450726 | | |
| FORD | | | | | | Z8250(Secador) | 0986628250 | DB0224(Elem.SA) | 0986BF0224 | | |
| FORD | | | | | | | | RB0582(SR) | 0986450582 | | |
| FORD | Cargo 1722 E Turbo | Cummins6BTAA | 01.07 => | OB0511 | 0986B00511 | AB3003(P) | 0986B03003 | DB0368 | 0986BF0368 | | |
| FORD | | | | HB1652(DH) | 0986B01652 | AB3406(S) | 0986B03406 | DB0350 | 0986BF0350 | | |
| FORD | Cargo 1722 F Turbo | Cummins6CTAA 8.3 | 01.04 => | "OB1011/OB1043" | 0986B01011/0986B01043 | | | | | | |
| FORD | | | | HB1652(DH) | 0986B01652 | | | | | | |
| FORD | | | | | | | | | | | |
| FORD | Cargo 1722 F Turbo | | | | | Z8250(Secador) | 0986628250 | | | | |
| FORD | Cargo 1730 | Cummins6CTAA | 01.98 => | "OB1011/OB1043" | 0986B01011/0986B01043 | | | DB0726(BoxSA) | 0986450726 | | |
| FORD | | | | HB1652(DH) | 0986B01652 | | | DB0519(S) | 0986450519 | | |
| FORD | Cargo 1730 C Turbo | 8270Cummins6CTAA | 01.04 => | "OB1011/OB1043" | 0986B01011/0986B01043 | AB3003(P) | 0986B03003 | DB0728(P) | 0986450728 | | |
| FORD | | | | HB1652(DH) | 0986B01652 | AB3406(S) | 0986B03406 | DB0519(S) | 0986450519 | | |

| MARCA | VEHÍCULO | MOTOR | FECHA | SC | ACEITE | SC | AIRE | SC | COMBUSTIBLE | SC | HABITÁCULO |
|---|---|---|---|---|---|---|---|---|---|---|---|
| FORD | | | | | | | | DB0224(Elem.SA) | 0986BF0224 | | |
| FORD | | | | | | | | RB0582(SR) | 0986450582 | | |
| FORD | Cargo 1730 F Turbo | 8270Cummins6CTAA | 01.01 => 01.04 | "OB1011/OB1043" | 0986B01011/0986B01043 | | | DB0728(P) | 0986450728 | | |
| FORD | | | | | | | | DB0713 | 0986450713 | | |
| FORD | | | | | | | | DB0726(BoxSA) | 0986450726 | | |
| FORD | | | | | | | | DB0224(Elem.SA) | 0986BF0224 | | |
| FORD | Cargo 1731 Max Ton | 8.3Cummins6CTAA | 01 => | "OB1011/OB1043" | 0986B01011/0986B01043 | AB3003(P) | 0986B03003 | DB0728(P) | 0986450728 | | |
| FORD | | | | | | AB3406(S) | 0986B03406 | DB0519(S) | 0986450519 | | |
| FORD | | | | | | Z8250(Secador) | 0986628250 | DB0726(BoxSA) | 0986450726 | | |
| FORD | Cargo 1831 E | CUMMINSC8.3300CIV-0 | 01.07 => | OB1043 | 0986B01043 | AB3003(P) | 0986B03003 | DB0368 | 0986BF0368 | | |
| FORD | | | | | | AB3406(S) | 0986B03406 | DB0235(C/vaso) | 0986BF0235 | | |
| FORD | Cargo 1932 | CumminsISCe6320P5 | 06.11 => | OB1043 | 0986B01043 | AB3003(P) | 0986B03003 | DB0235(C/vaso) | 0986BF0235 | | |
| FORD | | | | HB1652(DH) | 0986B01652 | AB3406(S) | 0986B03406 | DB0230 | 0986BF0230 | | |
| FORD | | | | | | | | | | | |
| FORD | Cargo 2422 6x4 | 8.3Cummins6CTAA | 01.01=> | "OB1011/OB1043" | 0986B01011/0986B01043 | | | DB0713(P) | 0986450713 | | |
| FORD | | | | HB1652(DH) | 0986B01652 | | | DB0519(S) | 0986450519 | | |
| FORD | | | | | | Z8250(Secador) | 0986628250 | | | | |
| FORD | Cargo 2425 6x4 | 8.3Cummins6CTAA | 00 => 03 | "OB1011/OB1043" | 0986B01011/0986B01043 | | | DB0713(P) | 0986450713 | | |
| FORD | | | | HB1652(DH) | 0986B01652 | | | DB0519(S) | 0986450519 | | |
| FORD | | | | | | | | DB0726(BoxSA) | 0986450726 | | |
| FORD | Cargo 2622 | 8.3Cummins6CTAA | 01.01=> | OB1011 | 0986B01011 | | | DB0713(P) | 0986450713 | | |
| FORD | | | | | | Z8250(Secador) | 0986628250 | DB0726(BoxSA) | 0986450726 | | |
| FORD | Cargo 2625 | 8.3Cummins6CTAA | 98 => 00 | "OB1011/OB1043" | 0986B01011/0986B01043 | | | DB0728(P) | 0986450728 | | |
| FORD | | | | HB1652(DH) | 0986B01652 | | | DB0519(S) | 0986450519 | | |
| FORD | | | | | | | | DB0726(BoxSA) | 0986450726 | | |
| FORD | | | | | | | | RB0582(SR) | 0986450582 | | |
| FORD | Cargo 2626 | 8.3Cummins6CTAA | 01.01 => | OB1011 | 0986B01011 | | | DB0713(P) | 0986450713 | | |
| FORD | | | | | | | | DB0519(S) | 0986450519 | | |
| FORD | Cargo 2626 | | | | | Z8250(Secador) | 0986628250 | DB0224(Elem.SA) | 0986BF0224 | | |
| FORD | | | | | | | | RB0582(SR) | 0986450582 | | |
| FORD | Cargo 2626 Turbo | 8270Cummins6CTAA | 01.01 => | "OB1011/OB1043" | 0986B01011/0986B01043 | AB3003(P) | 0986B03003 | DB0224(Elem.SA) | 0986BF0224 | | |
| FORD | | | | HB1652(DH) | 0986B01652 | AB3406(S) | 0986B03406 | | | | |
| FORD | Cargo C 2628 E | CumminsISBE5.9L | 02.05 => | OB1043 | 0986B01043 | AB3003(P) | 0986B03003 | DB0726(BoxSA) | 0986450726 | | |
| FORD | | | 08.10 => | | | | | DB0350 | 0986BF0350 | | |
| FORD | Cargo C 2631 | Cummins6CTAA | 01.01 => | OB1011 | 0986B01011 | | | DB0713(P) | 0986450713 | | |
| FORD | | | | | | | | DB0224(Elem.SA) | 0986BF0224 | | |
| FORD | Cargo C 2631 | TurboAftercooler8.270Cummins6CTAA | 01.01 =>01.04 | OB1011 | 0986B01011 | | | DB0713(P) | 0986450713 | | |
| FORD | | | | OB1043 | 0986B01043 | | | DB0224(Elem.SA) | 0986BF0224 | | |
| FORD | Cargo C 2631 | Cummins8270 6CTAA | 01.04 => | "OB1011/OB1043" | 0986B01011/0986B01043 | | | DB0224(Elem.SA) | 0986BF0224 | | |

| MARCA | VEHÍCULO | MOTOR | FECHA | SC | ACEITE | SC | AIRE | SC | COMBUSTIBLE | SC | HABITÁCULO |
|---|---|---|---|---|---|---|---|---|---|---|---|
| FORD | | | | HB1652(DH) | 0986B01652 | | | | | | |
| FORD | | | | | | Z8250(Secador) | 0986628250 | | | | |
| FORD | Cargo 2631 E | Cummins6BTAA | 01.07 => | OB1043 | 0986B01043 | AB3003(P) | 0986B03003 | DB0368 | 0986BF0368 | | |
| FORD | | | | HB1652(DH) | 0986B01652 | AB3406(S) | 0986B03406 | DB0235 | 0986BF0235 | | |
| FORD | | | | | | | | DB0726(BoxSA) | 0986450726 | | |
| FORD | Cargo 2632 E | CUMMINSISC320P5 | 06.07 => | OB1043 | 0986B01043 | AB3003(P) | 0986B03003 | DB0235 | 0986BF0235 | | |
| FORD | | | | HB1652(DH) | 0986B01652 | AB3406(S) | 0986B03406 | DB0230 | 0986BF0230 | | |
| FORD | | | | | | | | DB0224(Elem.SA) | 0986BF0224 | | |
| FORD | | | | | | | | DB0726(BoxSA) | 0986450726 | | |
| FORD | Courier | 1.3iEndura | | OB3321 | 0451103321 | AB2320 | 0986B02320 | GB0026 | 0986BF0026 | CB0513 | 0986BF0513 |
| FORD | Courier | 1.4i 16vZetec | => 98 | OB3321 | 0451103321 | AB2320 | 0986B02320 | GB0026 | 0986BF0026 | CB0513 | 0986BF0513 |
| FORD | Courier | 1.6iRocam | 05 => | OB0003 | 0986B00003 | AB2320 | 0986B02320 | GB0026 | 0986BF0026 | CB0513 | 0986BF0513 |
| FORD | Courier | 1.8DieselEndura | 98 => | OB0033 | 0986B00033 | S3711 | 1457433711 | "DB0306 /DB0851" | 0986BF0306/0986450851 | CB0513 | 0986BF0513 |
| FORD | < | 1.8DieselEnduraVAN | 97 =>00 | OB0033 | 0986B00033 | S3711 | 1457433711 | DB0306 | 0986BF0306 | CB0513 | 0986BF0513 |
| FORD | F-100 Supercab | 2.5MaxionHSTD | 96 => 99 | OB1026 | 0986B01026 | AB3531(P) | 0986B03531 | DB0732 | 0986450732 | | |
| FORD | | | | | | AB3904(S) | 0986B03904 | | | | |
| FORD | F-100 | 3.6Max-Econo | 93 => | OB3325 | 0451103325 | | | GB0008 | 0986BF0008 | | |
| FORD | F-100 | 3.9D4x4 MWM | 93=>99 | OB1027 | 0986B01027 | AB3531 | 0986B03531 | DB0709(BoxSA) | 0986450709 | | Nolleva |
| FORD | F-100 | 3.9TDCummins4BTAA | 99 => | OB1010 / OB1008 | 0986B01010/0986B01008 | AB3531(P) | 0986B03531 | DB0732 | 0986450732 | | |
| FORD | | | | HB1652(DH) | 0986B01652 | AB3904(S) | 0986B03904 | | | | |
| FORD | F-100 | 4.2MWMTurboDiesel | 01 => | OB1027 | 0986B01027 | AB3531(P) | 0986B03531 | DB0400 | 0986BF0400 | | |
| FORD | | | | | | AB3904(S) | 0986B03904 | | | | |
| FORD | F-100 | 4.2MWMTurboDiesel | 99 => 00 | OB1027 | 0986B01027 | AB3531(P) | 0986B03531 | DB0851 | 0986450851 | | |
| FORD | | | | | | AB3904(S) | 0986B03904 | | | | |
| FORD | F-100 | 4.9i | | OB3325 | 0451103325 | | | DB0704 | 0986450704 | | |
| FORD | F-100 | MWM4.10T | 96 => | OB1027 | 0986B01027 | AB3531(P) | 0986B03531 | DB0732 | 0986450732 | | |
| FORD | | | | HB1652(DH) | 0986B01652 | AB3904(S) | 0986B03904 | | | | |
| FORD | F-100 | MWM229/4TD | 92 => 95 | OB1027 | 0986B01027 | AB3531(P) | 0986B03531 | "DB0732 /DB0704" | 0986450732/0986450704 | | |
| FORD | | | | HB1652(DH) | 0986B01652 | AB3904(S) | 0986B03904 | | | | |
| FORD | F-100 | MWM229/4D | | OB1000 | 0986B01000 | | | DB0732 | 0986450732 | | |
| FORD | | | | HB1652(DH) | 0986B01652 | | | | | | |
| FORD | F-100 | 3.9CumminsTD14(Intercooler) | 01.04 => | OB1010 | 0986B01010 | AB3531(P) | 0986B03531 | DB0732 | 0986450732 | | |
| FORD | | | | | | AB3904(S) | 0986B03904 | | | | |
| FORD | F-100 | Perkins4-203 | 77 => 85 | OB3325 | 0451103325 | AB3534(P) | 0986B03534 | DB0695 | 0986450695 | | |
| FORD | | | | | | "AB3403/AB3901" | 0986B03403/0986B03901 | | | | |
| FORD | | | | | | | | | | | |
| FORD | F-100 | Perkins4-203Potenc. | 85 => 87 | OB3325 | 0451103325 | AB2034 | 0986B02034 | DB0695 | 0986450695 | | |
| FORD | F-100 | Perkins4-PA203 | 87 => | OB3325 | 0451103325 | | | DB0695 | 0986450695 | | |
| FORD | F-100 | DeutzF4L914 | | OB1027 | 0986B01027 | AB3526 | 0986B03526 | DB0695 | 0986450695 | | |

| MARCA | VEHÍCULO | MOTOR | FECHA | SC | ACEITE | SC | AIRE | SC | COMBUSTIBLE | SC | HABITÁCULO |
|---|---|---|---|---|---|---|---|---|---|---|---|
| FORD | F-100 | 3,9MaxPower | 06.06 => | | | | | DB0236 | 0986BF0236 | | |
| FORD | F-100 | Cummins3.9 | 01.07 => | OB0511 | 0986B00511 | AB3531(P) | 0986B03531 | DB0236 | 0986BF0236 | | |
| FORD | | | | | | AB3904(S) | 0986B03904 | | | | |
| FORD | F-150 | MWM 229/4D | | OB1000 | 0986B01000 | | | DB0704 | 0986450704 | | |
| FORD | F-250 - F-350 - F-3500 | Perkins6-PF305 | 77 => | OB1028 | 0986B01028 | AB3511(P) | 0986B03511 | DB0695 | 0986450695 | | |
| FORD | F-350 | 3.9Cummins4BT | 98 => | OB1010 | 0986B01010 | AB3531(P) | 0986B03531 | DB0732 | 0986450732 | | |
| FORD | | | | HB1652(DH) | 0986B01652 | AB3904(S) | 0986B03904 | | | | |
| FORD | F-350 | Perkins6-PF305 | 77 => | OB1028 | 0986B01028 | AB3511(P) | 0986B03511 | DB0695 | 0986450695 | | |
| FORD | F-3500 | Perkins6-PF305 | 77 => | OB1028 | 0986B01028 | AB3511(P) | 0986B03511 | DB0695 | 0986450695 | | |
| FORD | F- 4000 | 3.9Cummins4BTAA | 01.02 => | OB1010 | 0986B01010 | AB3531(P) | 0986B03531 | DB0732 | 0986450732 | | |
| FORD | | | | HB1652(DH) | 0986B01652 | AB3904(S) | 0986B03904 | | | | |
| FORD | F- 4000 | 3.9Cummins4BT | 05.96 => | OB1015 | 0986B01015 | | | | | | |
| FORD | | | | HB1652(DH) | 0986B01652 | | | | | | |
| FORD | F- 4000 | 5.9Cummins6BTAA | 01.99 => | OB1008 | 0986B01008 | | | | | | |
| FORD | F-4000 | MWMD229/4 | 96 => | OB1000 | 0986B01000 | AB3531(P) | 0986B03531 | DB0200 | 0986BF0200 | | |
| FORD | | | | HB1652(DH) | 0986B01652 | AB3904(S) | 0986B03904 | DB0704 | 0986450704 | | |
| FORD | | | | | | | | | | | |
| FORD | F-600/ F-6000 | Perkins6-PF305 | 77 => | OB1028 | 0986B01028 | AB3511(P) | 0986B03511 | DB0695 | 0986450695 | | |
| FORD | F-700/ F-7000 | Perkins6-354-T | 78 => | OB1028 | 0986B01028 | AB3535 | 0986B03535 | DB0695 | 0986450695 | | |
| FORD | F-14.000 HD | 5.9Cummins6BTAA | 99 => | OB1008 | 0986B01008 | | | DB0728 | 0986450728 | | |
| FORD | | | | | | | | DB0726(BoxSA) | 0986450726 | | |
| FORD | | | | | | | | DB0224(ElemSA) | 0986BF0224 | | |
| FORD | F-14.000 HD | MWM6.10 | 96 => 98 | OB1015 | 0986B01015 | AB3531(P) | 0986B03531 | DB0200 | 0986BF0200 | | |
| FORD | | | | | | AB3904(S) | 0986B03904 | DB0704 | 0986450704 | | |
| FORD | F-14.000 HD | MWMD229/6 | => 95 | OB1027 | 0986B01027 | AB3511(P) | 0986B03511 | DB0200 | 0986BF0200 | | |
| FORD | | | | HB1652(DH) | 0986B01652 | AB3903(S) | 0986B03903 | DB0705(SA) | 0986450705 | | |
| FORD | | | | | | | | DB0704 | 0986450704 | | |
| GROSSPAL | Comerciales | | | | | | | | | | |
| GROSSPAL | G 600 | Perkins4.203 | | OB3325 | 0451103325 | | | DB0695 | 0986450695 | | |
| GROSSPAL | G 640 | DeutzF4L913 | | OB1027 | 0986B01027 | AB3526 | 0986B03526 | DB0732 | 0986450732 | | |
| GROSSPAL | G 660 | Perkins6.354 | | OB1028 | 0986B01028 | AB3511(P) | 0986B03511 | DB0695 | 0986450695 | | |
| GROSSPAL | G 6 - 4.5 | Cummins3.9BT | | OB1010 | 0986B01010 | AB3511(P) | 0986B03511 | DB0732 | 0986450732 | | |
| HONDA | | | | | | | | | | | |
| HONDA | Accord | 2.0i-2.0i16v | => 99 | OB2354 | 0986452354 | | | F0115 | 0986450115 | | |
| HONDA | Accord | 2.2i-2.2i16v | => 98 | OB2354 | 0986452354 | | | F0115 | 0986450115 | | |
| HONDA | Accord | 2.3i | 99 => 02 | OB2354 | 0986452354 | | | F0115 | 0986450115 | | |
| HONDA | Accord | 2.4i16v | 01.03 => | | | | | F5916 | 0450905916 | | |
| HONDA | Accord | 3.0iV6 24v | 98 => | OB2354 | 0986452354 | | | F0115 | 0986450115 | | |
| HONDA | Accord IV | 2.4(KA24A) | 08.08=>11.12 | P7210 | F026407210 | | | | | | |

| MARCA | VEHÍCULO | MOTOR | FECHA | SC | ACEITE | SC | AIRE | SC | COMBUSTIBLE | SC | HABITÁCULO |
|---|---|---|---|---|---|---|---|---|---|---|---|
| HONDA | CR-V | 2.0i16vDOHC | 06.97 => | OB2354 | 0986452354 | S3955 | 1457433955 | | | CB0519 | 0986BF0519 |
| HONDA | CR-V II | 2.0i16vK20A4 | 06.02 => 10.06 | OB2354 | 0986452354 | S3955 | 1457433955 | F5916 | 0450905916 | CB0536 | 0986BF0536 |
| HONDA | CR-V II | 2.4i16v DOHCI-VTEC KD4A1 | 08.02=> 10.06 | OB0015 | 0986B00015 | | | | | | |
| HONDA | CR-V III | 2.4i16v DOHCI-VTEC | 10.07 => | OB0015 | 0986B00015 | | | | | | |
| HONDA | CR-V IV | 2.4i16v DOHCI-VTEC | | | | | | | | | |
| HONDA | Civic 1.3 | | 01.84 => 12.87 | OB3322 | 0451103322 | | | | | | |
| HONDA | Civic 1.5 | | 01.84 => 12.87 | OB3322 | 0451103322 | | | | | | |
| HONDA | Civic 1.5 | D15Z3 | 09.94 => 01.97 | OB2354 | 0986452354 | | | | | CB0519 | 0986BF0519 |
| HONDA | Civic | 1.616v | 96 => 01 | OB2354 | 0986452354 | | | F5916 | 0450905916 | CB0519 | 0986BF0519 |
| HONDA | Civic | 1.7i16v | 01 => | OB0015 | 0986B00015 | | | F5916 | 0450905916 | CB0536 | 0986BF0536 |
| HONDA | Civic VII | 1.7iD17A9 | 11.04 => 02.07 | OB0015 | 0986B00015 | | | | | CB0536 | 0986BF0536 |
| HONDA | Civic | 1.8iVTEC(FK/FN)(R18A2) | 01.07 =>12.09 | OB0015 | 0986B00015 | S0098 | F026400098 | | | M2203 | 1987432203 |
| HONDA | Civic | 2.0iVTEC(TypeR)(K20Z4) | 04.07 => | OB0015 | 0986B00015 | S0098 | F026400098 | | | M2203 | 1987432203 |
| HONDA | Civic | 1.8i-VTEC | 11.13 => | OB0015 | 0986B00015 | | | | | | |
| HONDA | City 1.5 16 v | SOHCi-VTECLX/EX/ELX | 07.09 => | OB0015 | 0986B00015 | S0223 | F026400223 | | | CB0554 | 0986BF0554 |
| HONDA | Fit 1.4i | CVT | 03 => | OB0015 | 0986B00015 | S9191 | 1987429191 | | | CB0552 | 0986BF0552 |
| HONDA | Fit 1.5i | VTEC | 05 => | OB0015 | 0986B00015 | S0054 | F026400054 | | | CB0552 | 0986BF0552 |
| HONDA | Fit 1.4 16v LX MT/AT/ LX MT | VTECi | 01.09 => | OB2354 | 0986452354 | S0223 | F026400223 | | | CB0552 | 0986BF0552 |
| HONDA | Fit 1.5 16v EX MT / EXL AT | VTECi | 01.09 => | OB0015 | 0986B00015 | S0223 | F026400223 | | | CB0552 | 0986BF0552 |
| HONDA | Fit 1.4 8V | L13Z | 11.08 => | | | | | | | CB0554 | 0986BF0554 |
| HONDA | HR-V | 1.616v | 99 => | OB2354 | 0986452354 | S3955 | 1457433955 | F0115 | 0986450115 | | |
| HONDA | HR-V II | 1.8Li-VTEC(R18A1) | 06.15 => | OB0015 | 0986B00015 | | | | | | |
| HONDA | Legend | 3.5i24v | 96 => | OB2354 | 0986452354 | | | F0115 | 0986450115 | | |
| HONDA | Odissey | 2.2i16v | => 99 | OB2354 | 0986452354 | | | F0115 | 0986450115 | | |
| HONDA | Prelude 1.6 | | 01.83 => 12.87 | OB3322 | 0451103322 | | | | | | |
| HONDA | Prelude | 2.2i-2.3i | | OB2354 | 0986452354 | | | F0115 | 0986450115 | | |
| HONDA | Stream | 2.0i | | OB2354 | 0986452354 | | | | | | |
| HYUNDAI | | | | | | | | | | | |
| HYUNDAI | Accent | 1.5i16v | 00 => 04 | OB2354 | 0986452354 | | | | | | |
| HYUNDAI | Accent | 1.5i12v | 98 => 00 | OB2354 | 0986452354 | | | | | | |
| HYUNDAI | Accent | 1.5i16v | 98 => 00 | OB2354 | 0986452354 | | | | | | |
| HYUNDAI | Accent | 1.512vDiesel | 03 => | | | | | | | | |
| HYUNDAI | Atos | 1.0i12v | 01=> 04 | P7210 | F026407210 | | | | | | |
| HYUNDAI | Atos | 1.0i12v | 98 => 01 | P7210 | F026407210 | | | | | | |
| HYUNDAI | Elantra | 1.6i16v | 95 => | OB2354 | 0986452354 | | | | | | |
| HYUNDAI | Elantra | 1.8i | 95 => | OB2354 | 0986452354 | | | | | | |
| HYUNDAI | Elantra | 1.8i16v | 01 => 03 | OB2354 | 0986452354 | | | | | | |
| HYUNDAI | Elantra | 2.0i16v | 04 => | OB2354 | 0986452354 | | | | | | |
| HYUNDAI | Elantra | 1.816V | 06.13 => | OB2354 | 0986452354 | | | | | | |

| MARCA | VEHÍCULO | MOTOR | FECHA | SC | ACEITE | SC | AIRE | SC | COMBUSTIBLE | SC | HABITÁCULO |
|---|---|---|---|---|---|---|---|---|---|---|---|
| HYUNDAI | Excel | 1.5i | | OB2354 | 0986452354 | | | | | | |
| HYUNDAI | FX Coupé | 2.0i 16v | => 02 | OB2354 | 0986452354 | | | | | | |
| HYUNDAI | FX Coupé | 2.7V6 24v | 05 => | OB2354 | 0986452354 | | | | | | |
| HYUNDAI | Galloper | 2.5 Diesel-Turbo Diesel | => 03 | OB0011 | 0986B00011 | | | DB0719 | 0986450719 | | |
| HYUNDAI | Galloper | 2.8 Turbo Diesel | 97 => | OB0011 | 0986B00011 | | | | | | |
| HYUNDAI | H - 1 | 2.5 Diesel-Turbo Diesel | 99 => | OB0011 | 0986B00011 | | | DB0719 | 0986450719 | | |
| HYUNDAI | H - 100 | 2.5 Diesel | | OB0011 | 0986B00011 | | | DB0719 | 0986450719 | | |
| HYUNDAI | H - 100 Grace | 2.5 Diesel | | OB0011 | 0986B00011 | | | DB0719 | 0986450719 | | Nolleva |
| HYUNDAI | H - 100 Minibus | 2.5 Turbo Diesel | 95 => | | | | | DB0719 | 0986450719 | | Nolleva |
| HYUNDAI | H - 100 Porter | | 97 => | OB0011 | 0986B00011 | | | DB0719 | 0986450719 | | |
| HYUNDAI | H - 100 Truck | 2.5 Turbo Diesel | 99 => 03 | | | | | DB0719 | 0986450719 | | |
| HYUNDAI | H - 100 Truck | 2.5 Diesel | 97 => | | | | | DB0720 | 0986450720 | | |
| HYUNDAI | H - 100 Truck | 2.5 Diesel | => 97 | | | | | DB0720 | 0986450720 | | |
| HYUNDAI | H - 100 Van | 2.5 Diesel | | OB0011 | 0986B00011 | | | DB0719 | 0986450719 | | |
| HYUNDAI | H - 250 | 3.6 Diesel | => 00 | | | | | DB0720 | 0986450720 | | |
| HYUNDAI | H - 350 | 3.3 Turbo Diesel | 98 => 00 | | | | | DB0720 | 0986450720 | | |
| HYUNDAI | HD 65 | 3.3 Turbo Diesel | 00 => | OB0011 | 0986B00011 | | | "DB0719/DB0720" | 0986450719/0986450720 | | |
| HYUNDAI | HD 72 | 3.3 Turbo Diesel | 00 => | OB0011 | 0986B00011 | | | "DB0719/DB0720" | 0986450719/0986450720 | | |
| HYUNDAI | Matrix | 1.6 16v | 01 => 05 | | | | | | | | |
| HYUNDAI | i 30 | 1.4i/1.6i/2.0i | 09 => | OB2354 | 0986452354 | | | | | CB0573 | 0986BF0573 |
| HYUNDAI | Santa Fe | 2.0 16v Turbo Diesel | 01.'04 => | | | | | | | | |
| HYUNDAI | Santa Fe | 2.4i | | OB2354 | 0986452354 | | | | | | |
| HYUNDAI | Santa Fe | 2.7iV6-24v | | OB2354 | 0986452354 | | | | | | |
| HYUNDAI | Santamo | 2.0i | 00 => 02 | OB2354 | 0986452354 | | | | | | |
| HYUNDAI | Sonata | 2.0i | => 00 | OB2354 | 0986452354 | | | | | | |
| HYUNDAI | Sonata | 2.5iV6 | => 99 | OB2354 | 0986452354 | | | | | | |
| HYUNDAI | Sonata | 2.7V6 | 04 => 05 | OB2354 | 0986452354 | | | | | | |
| HYUNDAI | Sonata | 3.3V6 | 06 => | OB2354 | 0986452354 | | | | | | |
| HYUNDAI | Terracan | 2.9 16v Turbo Diesel | 04 => | | | | | N6508 | 0450906508 | | |
| HYUNDAI | Trajet | 2.0i 16v | | OB2354 | 0986452354 | | | | | | |
| HYUNDAI | Trajet | 2.7iV6 24v | | OB2354 | 0986452354 | | | | | | |
| HYUNDAI | Tucson 2.0 CRDi | D4EA | 9.04 => 12.05 | OB2354 | 0986452354 | S0044 | F026400044 | | | | |
| HYUNDAI | | | | P7018 | F026407018 | | | | | | |
| HYUNDAI | Tucson 2.0 CRDi | D4EA | 01.06 => 12.08 | P7018 | F026407018 | S0044 | F026400044 | N2010 | F026402010 | | |
| HYUNDAI | Tucson 2.0 | 4G63 | 01.05 => | OB2354 | 0986452354 | S0044 | F026400044 | | | CB0559 | 0986BF0559 |
| HYUNDAI | Tucson 2.7i V6 24v | G6BA | 01.05 => | OB2354 | 0986452354 | S0044 | F026400044 | | | CB0559 | 0986BF0559 |
| ISUZU | | | | | | | | | | | |
| ISUZU | Amigo | 2.2 | 00 => 03 | | | | | | | | |
| ISUZU | Amigo | 3.2iV6 24v | 00 => 03 | OB0510 | 0986B00510 | AB3553 | 0986B03553 | GB0240 | 0986450240 | | |

| MARCA | VEHÍCULO | MOTOR | FECHA | SC | ACEITE | SC | AIRE | SC | COMBUSTIBLE | SC | HABITÁCULO |
|---|---|---|---|---|---|---|---|---|---|---|---|
| ISUZU | NKR | 2.8Diesel | 01 => 03 | | | | | | | | |
| ISUZU | NPR | 3.9TurboDiesel | 99 => 01 | | | | | | | | |
| ISUZU | NPR | 4.8TurboDiesel | 00 => 03 | | | | | | | | |
| ISUZU | Pick up | 2.5Diesel | 11.98=> | OB0006 | 0986B00006 | AB3553 | 0986B03553 | | | | Nolleva |
| ISUZU | Pick up | 2.8Diesel | | | | AB3553 | 0986B03553 | | | | |
| ISUZU | Pick up (Space Cab) | 2.8TurboDiesel(4JB1T) | 05.97 => | OB0510 | 0986B00510 | AB3553 | 0986B03553 | | | | |
| ISUZU | Pick up (Space Cab) | 3.1TurboDiesel(4JG2T) | 98 => 03 | P2064 | 0986452064 | | | DB0719 | 0986450719 | | Nolleva |
| ISUZU | Rodeo | 3.2iV6-24v | => 03 | | | | | GB0240 | 0986450240 | | |
| ISUZU | Trooper | 2.6i | | OB2354 | 0986452354 | | | | | | |
| ISUZU | Trooper | 3.1TurboDiesel | => 03 | P2064 | 0986452064 | | | | | | |
| ISUZU | Trooper | 3.2iV6 24v | => 98 | | | | | | | | |
| ISUZU | Vehicross | 3.5V6 | 01 => 02 | | | | | GB0240 | 0986450240 | | |
| IVECO | Camiones - Comerciales | | | | | | | | | | |
| IVECO | 319 NA - 341 A/ A1 | | | OB1015 | 0986B01015 | | | DB0717 | 0986450717 | | |
| IVECO | 619 N1-T1 | | | OB1015 | 0986B01015 | | | DB0717 | 0986450717 | | |
| IVECO | 619 N1-T1 | | | HB1652(DH) | 0986B01652 | | | | | | |
| IVECO | 619 N-T | | | OB1015 | 0986B01015 | | | DB0717 | 0986450717 | | |
| IVECO | 619 N-T | | | HB1652(DH) | 0986B01652 | | | | | | |
| IVECO | 673 N-T | c/enfriadordeaceite | | OB1015 | 0986B01015 | | | DB0717 | 0986450717 | | |
| IVECO | 673 N-T | | | HB1652(DH) | 0986B01652 | | | | | | |
| IVECO | 673 N-T | s/enfriadordeaceite | | | | | | DB0717 | 0986450717 | | |
| IVECO | 697 N-T | | | OB1015 | 0986B01015 | | | DB0717 | 0986450717 | | |
| IVECO | AU 130 - 120 | | | OB1014 | 0986B01014 | AB3535 | 0986B03535 | DB0732 | 0986450732 | | |
| IVECO | AU 130 - 120 | | | HB1652(DH) | 0986B01652 | | | | | | |
| IVECO | Cursor 450E33T (4x2) | Cursor8(Intercool.) | 11.11=> | OB0511 | 0986B00511 | AB2288(P) | 1457432288 | DB0368 | 0986BF0368 | | |
| IVECO | | | | | | | | DB0312 | 0986BF0312 | | |
| IVECO | | | | | | Z8250(Secador) | 0986628250 | DB0709(BoxSA) | 0986450709 | | |
| IVECO | | | | | | | | DB0220(Elem.SA) | 0986BF0220 | | |
| IVECO | Daily 35.10 | 8140.23-2.8DTurbo | 98 => | OB1001 | 0986B01001 | | | DB0732 | 0986450732 | | |
| IVECO | | | | | | | | | | | |
| IVECO | Daily 40.8 | 8140.07-2.5D | 94 => 95 | OB1001 | 0986B01001 | | | DB0732 | 0986450732 | | Nolleva |
| IVECO | | | | | | | | | | | |
| IVECO | Daily 40.12 | 8140.43-2.8DTurbo | 05.96 => 08.99 | OB1001 | 0986B01001 | | | DB0732 | 0986450732 | | |
| IVECO | Daily 45.10 | 8140.27-2.5DTurbo | 94 => 95 | OB1001 | 0986B01001 | | | DB0732 | 0986450732 | | |
| IVECO | Daily 49.10 | 8140.27-2.5DTurbo | => 04.96 | OB1001 | 0986B01001 | | | DB0732 | 0986450732 | | |
| IVECO | Daily 49.10 | 8140.23-2.8DTurbo | 05-96 => | OB1001 | 0986B01001 | | | DB0732 | 0986450732 | | |
| IVECO | Daily 49.12 | 8140.43-2.8DTurbo | 05.96 => 08.99 | OB1001 | 0986B01001 | | | DB0732 | 0986450732 | | |
| IVECO | Daily 59.12 | 8140.43-2.8DTurbo | 05.96 => 08.99 | OB1001 | 0986B01001 | AB3300 | 0986B03300 | DB0732 | 0986450732 | | |
| IVECO | Daily 70.12 | 8140.43-2.8DTurbo | 04.03 => | OB1001 | 0986B01001 | S3270 | 1457433270 | DB0732 | 0986450732 | | |

| MARCA | VEHÍCULO | MOTOR | FECHA | SC | ACEITE | SC | AIRE | SC | COMBUSTIBLE | SC | HABITÁCULO |
|---|---|---|---|---|---|---|---|---|---|---|---|
| IVECO | | | | HB1652(DH) | 0986B01652 | | | | | | |
| IVECO | Daily 35 S14/45 S14/ 55 S14 | 3.016VDieselTBHCElectrònico | 08 => | HB1652(DH) | 0986B01652 | | | | | | |
| IVECO | | | | | | | | | | | |
| IVECO | Daily 50 C 16 | 3.016VTBHCElect.FPTF1C | 01.08 => | HB1652(DH) | 0986B01652 | AB3300 | 0986B03300 | N2036(SA) | F026402036 | | |
| IVECO | Daily 70 C 16 | 3.0F1CE0481FA | 01.09 => | HB1652(DH) | 0986B01652 | AB3300 | 0986B03300 | N2036(SA) | F026402036 | | |
| IVECO | Eurocargo 90 E 14 | Tdi4.0 | | OB1001 | 0986B01001 | S0499 | F026400499 | DB0732 | 0986450732 | | |
| IVECO | | | | | | | | DB0312 | 0986BF0312 | | |
| IVECO | Eurocargo 120 E 15 | | | OB1001 | 0986B01001 | AB3513(P) | 0986B03513 | DB0732 | 0986450732 | | |
| IVECO | Eurocargo 120 E 15 | | 01.97 => | HB1652(DH) | 0986B01652 | AB3905(S) | 0986B03905 | | | | |
| IVECO | Eurocargo 120 E 15 | | | OB1001 | 0986B01001 | S3735 | 1457433735 | DB0732 | 0986450732 | | |
| IVECO | Eurocargo 120 E 15 | | | HB1652(DH) | 0986B01652 | | | DB0312 | 0986BF0312 | | |
| IVECO | Eurocargo 140 E 18 | | 97 => | OB1001 | 0986B01001 | AB3513(P) | 0986B03513 | DB0732 | 0986450732 | | |
| IVECO | Eurocargo 140 E 18 | | 01.97 => | HB1652(DH) | 0986B01652 | AB3905(S) | 0986B03905 | | | | |
| IVECO | 150 N - T - NC | | | OB1014 | 0986B01014 | AB3535 | 0986B03535 | DB0519 | 0986450519 | | |
| IVECO | 150 N - T - NC | | | HB1652(DH) | 0986B01652 | AB3535 | 0986B03535 | DB0519 | 0986450519 | | |
| IVECO | 150 E - 160 E | | | OB1001 | 0986B01001 | AB3513(P) | 0986B03513 | DB0732 | 0986450732 | | |
| IVECO | 150 E - 160 E | | 01.97 => | HB1652(DH) | 0986B01652 | AB3905(S) | 0986B03905 | | | | |
| IVECO | 150 E 20 N/T - 160 E 23 N/T | | | OB1015 | 0986B01015 | AB3513(P) | 0986B03513 | DB0717 | 0986450717 | | |
| IVECO | | | 01.97 => | | | AB3905(S) | 0986B03905 | | | | |
| IVECO | Eurocargo 150 E 18 T | 8060.25V-5.9 | 98 =>01.03 | OB1001 | 0986B01001 | AB3513(P) | 0986B03513 | DB0732 | 0986450732 | | |
| IVECO | | | | HB1652(DH) | 0986B01652 | AB3905(S) | 0986B03905 | DB0312 | 0986BF0312 | | |
| IVECO | Eurocargo 150 E 20 N/T | 8060.25-5.9D | | OB1001 | 0986B01001 | AB3513(P) | 0986B03513 | DB0717 | 0986450717 | | |
| IVECO | Eurocargo 150 E 20 N/T | 8060.25-5.9D | | HB1652(DH) | 0986B01652 | AB3905(S) | 0986B03905 | | | | |
| IVECO | Eurocargo 160 E 21 T | 8060.45V-5.9 | 98 => | OB1001 | 0986B01001 | AB3513(P) | 0986B03513 | DB0732 | 0986450732 | | |
| IVECO | Eurocargo 160 E 21 T | 8060.45V-5.9 | | HB1652(DH) | 0986B01652 | AB3905(S) | 0986B03905 | DB0312 | 0986BF0312 | | |
| IVECO | | | | | | | | | | | |
| IVECO | | | | | | | | DB0214(Elem.SA) | 0986BF0214 | | |
| IVECO | Eurocargo 160 E 23 N/T | 8060.45-5.9D | | OB1001 | 0986B01001 | AB3513(P) | 0986B03513 | DB0717 | 0986450717 | | |
| IVECO | Eurocargo 160 E 23 N/T | 8060.45-5.9D | | HB1652(DH) | 0986B01652 | AB3905(S) | 0986B03905 | | | | |
| IVECO | Eurocargo 160 E 23 N/T | 8060.45-5.9D | | | | | | DB0214(Elem.SA) | 0986BF0214 | | |
| IVECO | Eurocargo 160 E 24 | | | OB1001 | 0986B01001 | AB3513 | 0986B03513 | DB0312 | 0986BF0312 | | |
| IVECO | Eurocargo 160 E 24 | | | HB1652(DH) | 0986B01652 | | | DB0519(S) | 0986450519 | | |
| IVECO | Eurocargo II 170 E 22 | Tector6(F4AE0681D) | 01.04 => | OB0511 | 0986B00511 | AB3513(P) | 0986B03513 | DB0368 | 0986BF0368 | | |
| IVECO | | | | HB1652(DH) | 0986B01652 | AB3905(S) | 0986B03905 | DB0312 | 0986BF0312 | | |
| IVECO | | | | | | Z4008 (SA) | F026404008 | | | | |
| IVECO | Eurocargo 170 E 21 | MWM6.0TCA | 01.04 => | | | AB3513(P) | 0986B03513 | DB0709(BoxSA) | 0986450709 | | |
| IVECO | Eurocargo 170 E 21 | MWM6.0TCA | | | | AB3905(S) | 0986B03905 | DB0220(Elem.SA) | 0986BF0220 | | |
| IVECO | Eurocargo II 180 E 32 Cavallino | Cursor8 | 01.06 => | P7048 | F026407048 | AB2288(P) | 1457432288 | N2035 | F026402035 | | |
| IVECO | | | | | | | | DB0727(BoxSA) | 0986450727 | | |

| MARCA | VEHÍCULO | MOTOR | FECHA | SC | ACEITE | SC | AIRE | SC | COMBUSTIBLE | SC | HABITÁCULO |
|---|---|---|---|---|---|---|---|---|---|---|---|
| IVECO | | | | | | | | DB0223(Elem.SA) | 0986BF0223 | | |
| IVECO | Eurocargo 320 E 18 | | 97 => | OB1001 | 0986B01001 | AB3513(P) | 0986B03513 | DB0732 | 0986450732 | | |
| IVECO | Eurocargo 320 E 18 | | | P9165 | 1457429165 | AB3905(S) | 0986B03905 | | | | |
| IVECO | | | | HB1652(DH) | 0986B01652 | | | | | | |
| IVECO | Eurocargo II 450 E 32 Cavallino | Cursor8 | 01.06 => | P7048 | F026407048 | AB2288(P) | 1457432288 | N2035 | F026402035 | | |
| IVECO | | | | | | | | DB0727(BoxSA) | 0986450727 | | |
| IVECO | | | | | | | | DB0223(Elem.SA) | 0986BF0223 | | |
| IVECO | Eurocargo II 230 E 22 | TectorF4AE0681D | 01.06 => | OB0511 | 0986B00511 | AB2288(P) | 1457432288 | DB0368 | 0986BF0368 | | |
| IVECO | | | | HB1652(DH) | 0986B01652 | Z8250(Secador) | 0986628250 | DB0709(BoxSA) | 0986450709 | | |
| IVECO | | | | | | | | DB0220(Elem.SA) | 0986BF0220 | | |
| IVECO | Eurotech 180 E 24 | CursorE0618D | 06.02 => | P7048 | F026407048 | AB3536(P) | 0986B03536 | DB0312 | 0986BF0312 | | |
| IVECO | Eurotech 180 E 24 | CursorE0618D | 06.02 => | P9165(S) | 1457429165 | | | N2035 | F026402035 | | |
| IVECO | Eurotech 190 E 31 N | CursorE0681B | 06.02 => | P7048 | F026407048 | AB3536(P) | 0986B03536 | DB0312 | 0986BF0312 | | |
| IVECO | Eurotech 190 E 31 N | CursorE0681B | 06.02 => | | | | | N2035 | F026402035 | | |
| IVECO | Eurotech Cursor 450 E 31 T | | | P7049 | F026407049 | AB3536(P) | 0986B03536 | DB0312 | 0986BF0312 | | |
| IVECO | Eurotech 450 E 37 | | | P7049 | F026407049 | AB3536(P) | 0986B03536 | DB0312 | 0986BF0312 | | |
| IVECO | Eurotech 450 E 37 | | | HB1652(DH) | 0986B01652 | | | | | | |
| IVECO | Eurotech 450 E 37 | 8210.42KA-13.8 | 99 => | P7049 | F026407049 | AB3536(P) | 0986B03536 | | | | |
| IVECO | Eurotech 450 E 37 | | | HB1652(DH) | 0986B01652 | | | | | | |
| IVECO | Eurotrakker 190 E 38-44 | Cursor13 | 11.04 => | P7048 | F026407048 | S0078 | F026400078 | DB0312 | 0986BF0312 | | |
| IVECO | Eurotrakker 190 E 38-44 | | | HB1652(DH) | 0986B01652 | | | N2034 | F026402034 | | |
| IVECO | Eurotrakker 190 E 38-44 | | | Z4006 (DH) | F026404006 | | | | | | |
| IVECO | Eurotrakker 200 E 41 | | | P7049 | F026407049 | AB3536(P) | 0986B03536 | DB0312 | 0986BF0312 | | |
| IVECO | Eurotrakker 200 E 41 | | | HB1652(DH) | 0986B01652 | | | | | | |
| IVECO | Eurotrakker 340 E 38 | Cursor13 | 11.04 => | P7048 | F026407048 | S0078 | F026400078 | DB0312 | 0986BF0312 | | |
| IVECO | Eurotrakker 340 E 38 | | | HB1652(DH) | 0986B01652 | | | N2034 | F026402034 | | |
| IVECO | Eurotrakker 340 E 38 | | | Z4006 (DH) | F026404006 | | | | | | |
| IVECO | Eurotrakker 340 E 44 | Cursor13 | 11.04 => | P7048 | F026407048 | S0078 | F026400078 | | | | |
| IVECO | Eurotrakker 340 E 44 | | | Z4006 (DH) | F026404006 | | | | | | |
| IVECO | Eurotrakker 380 E 37 | | | P7049 | F026407049 | AB3536(P) | 0986B03536 | DB0312 | 0986BF0312 | | |
| IVECO | Eurotrakker 380 E 37 | | | HB1652(DH) | 0986B01652 | | | | | | |
| IVECO | Eurotrakker 380 E 38/44 | Cursor13 | 11.04 => | P7048 | F026407048 | S0078 | F026400078 | DB0312 | 0986BF0312 | | |
| IVECO | Eurotrakker 380 E 38/44 | | | HB1652(DH) | 0986B01652 | | | | | | |
| IVECO | Eurotrakker 380 E 38/44 | | | Z4006 (DH) | F026404006 | | | | | | |
| IVECO | Eurotrakker 410 E 38/44 | Cursor13 | 11.04 => | P7048 | F026407048 | S0078 | F026400078 | DB0312 | 0986BF0312 | | |
| IVECO | Eurotrakker 410 E 38/44 | | | HB1652(DH) | 0986B01652 | | | | | | |
| IVECO | Eurotrakker 410 E 38/44 | | | Z4006 (DH) | F026404006 | | | | | | |
| IVECO | Eurotrakker 450 E 37 | | 99 => | P7049 | F026407049 | AB3536(P) | 0986B03536 | | | | |
| IVECO | Eurotrakker 450 E 37 | | | HB1652(DH) | 0986B01652 | | | | | | |

| MARCA | VEHÍCULO | MOTOR | FECHA | SC | ACEITE | SC | AIRE | SC | COMBUSTIBLE | SC | HABITÁCULO |
|---|---|---|---|---|---|---|---|---|---|---|---|
| IVECO | Eurotrakker 450 E 37 | | | | | | | DB0214(Elem.SA) | 0986BF0214 | | |
| IVECO | Eurotrakker 410 E 38/44 | Cursor13 | 11.04 => | | | | | N2034 | F026402034 | | |
| IVECO | Eurotrakker 450 E 41 | 8210.42KA.875-13.8D | | P7049 | F026407049 | AB3536(P) | 0986B03536 | DB0312 | 0986BF0312 | | |
| IVECO | Eurotrakker 450 E 41 | | | HB1652(DH) | 0986B01652 | | | | | | |
| IVECO | 190.29 N-T | | | OB1001 | 0986B01001 | AB3536(P) | 0986B03536 | DB0717 | 0986450717 | | |
| IVECO | 190.29 N-T | | | HB1652(DH) | 0986B01652 | | | | | | |
| IVECO | 190.33 Turbo N-T | | | P7049 | F026407049 | AB3536(P) | 0986B03536 | DB0717 | 0986450717 | | |
| IVECO | 190.33 Turbo N-T | | | HB1652(DH) | 0986B01652 | | | | | | |
| IVECO | Stralis 310 | Cursor8310CV | 01.05 => | P7048 | F026407048 | S0080 | F026400080 | N2035 | F026402035 | | |
| IVECO | | | | HB1652(DH) | 0986B01652 | Z8250(Secador) | 0986628250 | DB0312 | 0986BF0312 | | |
| IVECO | | | | | | | | N2036 | F026402036 | | |
| IVECO | Stralis 380 | Cursor13F3BE0681G | 01.06 => | P7048 | F026407048 | | | N2034 | F026402034 | | |
| IVECO | | | | HB1652(DH) | 0986B01652 | Z8250(Secador) | 986628250 | DB0223(Elem.SA) | 0986BF0223 | | |
| IVECO | | | =>01.07 | | | | | DB0312 | 0986BF0312 | | |
| IVECO | | | 01.07=> | | | | | N2036(Prefiltro) | F026402036 | | |
| IVECO | Stralis 420 | Cursor13F3BE0681V | 01.06 => | P7048 | F026407048 | S0080 | F026400080 | DB0727(BoxSA) | 0986450727 | | |
| IVECO | | | | HB1652(DH) | 0986B01652 | Z8250(Secador) | 0986628250 | DB0223(Elem.SA) | 0986BF0223 | | |
| IVECO | | | => 01.07 | | | | | DB0312 | 0986BF0312 | | |
| IVECO | | | 01.07=> | | | | | N2036 | F026402036 | | |
| IVECO | Stralis 450 E 38 | Cursor13370CV | 01.05 => | P7048 | F026407048 | | | N2034 | F026402034 | | |
| IVECO | | | | HB1652(DH) | 0986B01652 | Z8250(Secador) | 0986628250 | DB0214(Elem.SA) | 0986BF0214 | | |
| IVECO | Tector 6 (Attack) 170E22 | 154Kw 210CV(6Cilindros) | 08.07 => | OB0511 | 0986B00511 | AB2288(P) | 1457432288 | DB0368 | 0986BF0368 | | |
| IVECO | | | | HB1652(DH) | 0986B01652 | | | DB0709(BoxSA) | 0986450709 | | |
| IVECO | | | | | | Z8250(Secador) | 0986628250 | DB0220(Elem.SA) | 0986BF0220 | | |
| IVECO | | | | | | | | DB0312 | 0986BF0312 | | |
| IVECO | Tector 170E25/T / 240E25/ 260E25 | 184Kw 250CV(6Cilindros) | 01.09 => | OB0511 | 0986B00511 | AB2288(P) | 1457432288 | DB0368 | 0986BF0368 | | |
| IVECO | | | | | | | | DB0709(BoxSA) | 0986450709 | | |
| IVECO | | | | | | Z8250(Secador) | 0986628250 | DB0220(Elem.SA) | 0986BF0220 | | |
| IVECO | | | | | | | | DB0312 | 0986BF0312 | | |
| IVECO | Vertis | 130V18//90V16 | 10.12 => | OB0511 | 0986B00511 | AB3300 | 0986B03300 | DB0368 | 0986BF0368 | | |
| JOHN DEERE | Tractores | | | | | | | | | | |
| JOHN DEERE | 940 | | | OB1005 | 0986B01005 | | | | | | |
| JOHN DEERE | 1030 | | | OB1005 | 0986B01005 | | | DB0695 | 0986450695 | | |
| JOHN DEERE | 1140 | | | OB1005 | 0986B01005 | | | | | | |
| JOHN DEERE | 1175 | JD6068T | | | | | | DB0217(Elem.SA) | 0986BF0217 | | |
| JOHN DEERE | 1420 | | | OB1005 | 0986B01005 | | | DB0695 | 0986450695 | | |
| JOHN DEERE | 2040 | | | OB1005 | 0986B01005 | | | | | | |
| JOHN DEERE | 2140 | | | OB1005 | 0986B01005 | | | | | | |
| JOHN DEERE | 2140 | | | OB1005 | 0986B01005 | | | DB0695 | 0986450695 | | |

| MARCA | VEHÍCULO | MOTOR | FECHA | SC | ACEITE | SC | AIRE | SC | COMBUSTIBLE | SC | HABITÁCULO |
|---|---|---|---|---|---|---|---|---|---|---|---|
| JOHN DEERE | 2330 | | | OB1005 | 0986B01005 | | | DB0695 | 0986450695 | | |
| JOHN DEERE | 2420 | | | OB1005 | 0986B01005 | | | DB0695 | 0986450695 | | |
| JOHN DEERE | 2530 | | | OB1005 | 0986B01005 | | | DB0695 | 0986450695 | | |
| JOHN DEERE | 2730 | | | OB1005 | 0986B01005 | | | DB0695 | 0986450695 | | |
| JOHN DEERE | 2850 | | | OB1005 | 0986B01005 | | | DB0695 | 0986450695 | | |
| JOHN DEERE | 3140 | | | OB1005 | 0986B01005 | | | DB0695 | 0986450695 | | |
| JOHN DEERE | 3420 | | | OB1005 | 0986B01005 | | | DB0695 | 0986450695 | | |
| JOHN DEERE | 4420 | | | OB1005 | 0986B01005 | | | DB0695 | 0986450695 | | |
| JOHN DEERE | 3530 - 4530 | | | OB1005 | 0986B01005 | | | DB0695 | 0986450695 | | |
| JOHN DEERE | 4730 | | | OB1005 | 0986B01005 | | | DB0695 | 0986450695 | | |
| JOHN DEERE | 4930 | | | OB1005 | 0986B01005 | | | | | | |
| JOHN DEERE | 5010 | | | OB1005 | 0986B01005 | | | | | | |
| JOHN DEERE | 5310 | | | OB1005 | 0986B01005 | | | | | | |
| JOHN DEERE | 5410 | | | OB1005 | 0986B01005 | | | | | | |
| JOHN DEERE | 5600 | | | OB1005 | 0986B01005 | | | | | | |
| JOHN DEERE | 1065 A - 1075 - 1075 A | | | OB1005 | 0986B01005 | AB3513 | 0986B03513 | DB0695 | 0986450695 | | |
| JOHN DEERE | 3330 - 3340 - 3350 | | | OB1005 | 0986B01005 | | | DB0695 | 0986450695 | | |
| JOHN DEERE | 3530 - 3540 - 3550 | | | OB1005 | 0986B01005 | | | DB0695 | 0986450695 | | |
| JOHN DEERE | 4040 - 4050 | | | | | | | DB0695 | 0986450695 | | |
| JOHN DEERE | 5730/5820/5830 | Cummins | | | | | | | | | |
| JOHN DEERE | 6300 | | | | | | | | | | |
| JOHN DEERE | 6500 | | | | | | | | | | |
| JOHN DEERE | 6500 4x2 | | | | | AB3535(P) | 0986B03535 | | | | |
| JOHN DEERE | | | | | | AB3904(S) | 0986B03904 | | | | |
| JOHN DEERE | 6600 | | | OB1005 | 0986B01005 | | | | | | |
| JOHN DEERE | 6710/744E | | | OB1011 | 0986B01011 | | | | | | |
| JOHN DEERE | 6910 | CUMMINSN14 | | OB1020 | 0986B01020 | AB3904(S) | 0986B03904 | | | | |
| JOHN DEERE | 7500 | | | | | AB3535(P) | 0986B03535 | DB0695 | 0986450695 | | |
| JOHN DEERE | 7600 | JD6068T | | | | | | | | | |
| JOHN DEERE | 8430 - 8440 - 8630 | | | OB1005 | 0986B01005 | | | DB0695 | 0986450695 | | |
| JOHN DEERE | 8450/8850 | | | | | | | RB0582(SR) | 0986450582 | | |
| JOHN DEERE | 8770 | JD10L | | OB1011 | 0986B01011 | | | | | | |
| JOHN DEERE | 8770 | JD10L | | OB1043 | 0986B01043 | | | | | | |
| JOHN DEERE | 8870 | JD10.1L350HP | | OB1043 | 0986B01043 | | | | | | |
| JOHN DEERE | 8960 | CUMMINSNT855 | | | | | | DB0224(Elem.SA) | 0986BF0224 | | |
| JOHN DEERE | 8960 | CUMMINSNT855 | | | | | | DB0224(Elem.SA) | 0986BF0224 | | |
| JOHN DEERE | 8960 | CUMMINSNT855 | | | | | | | | | |
| JOHN DEERE | 8970 | JD | | | | | | DB0224(Elem.SA) | 0986BF0224 | | |
| JOHN DEERE | 9650 W | | | | | | | DB0214(Elem.SA) | 0986BF0214 | | |

| MARCA | VEHÍCULO | MOTOR | FECHA | SC | ACEITE | SC | AIRE | SC | COMBUSTIBLE | SC | HABITÁCULO |
|---|---|---|---|---|---|---|---|---|---|---|---|
| JOHN DEERE | 9900 | | | OB1005 | 0986B01005 | | | DB0695 | 0986450695 | | |
| JOHN DEERE | 9910 - 9920 | | | OB1005 | 0986B01005 | | | DB0695 | 0986450695 | | |
| JOHN DEERE | JD 308 - JD 309 | | | OB1005 | 0986B01005 | | | DB0695 | 0986450695 | | |
| JOHN DEERE | JD 310A - JD 350 C | | | OB1005 | 0986B01005 | | | DB0695 | 0986450695 | | |
| JOHN DEERE | JD 440 - JD 440 A/B | | | OB1005 | 0986B01005 | | | DB0695 | 0986450695 | | |
| JOHN DEERE | JD 440 C | | | OB1005 | 0986B01005 | | | DB0695 | 0986450695 | | |
| JOHN DEERE | JD 540 - JD 540 A/B | | | OB1005 | 0986B01005 | | | DB0695 | 0986450695 | | |
| JOHN DEERE | JD 544 - JD 544 A | | | OB1005 | 0986B01005 | | | DB0695 | 0986450695 | | |
| JOHN DEERE | JD 544 B - JD 544 C | | | OB1005 | 0986B01005 | | | DB0695 | 0986450695 | | |
| JOHN DEERE | JD 570 - JD 570 A | | | OB1005 | 0986B01005 | | | DB0695 | 0986450695 | | |
| JOHN DEERE | JD 590 D | Cummins | | | | | | | | | |
| JOHN DEERE | JD 644 B | | | OB1005 | 0986B01005 | | | | | | |
| JOHN DEERE | 690 C | | | OB1020 | 0986B01020 | | | | | | |
| JOHN DEERE | JD 750 - JD 755 | | | OB1005 | 0986B01005 | | | DB0695 | 0986450695 | | |
| JOHN DEERE | JD 450 B | | | OB1005 | 0986B01005 | | | DB0695 | 0986450695 | | |
| JOHN DEERE | WA 14 / WA 17 | Cummins | | | | | | | | | |
| KIA | Vehículos - Comerciales | | | | | | | | | | |
| KIA | Avella | 1.5i | | OB2354 | 0986452354 | | | | | | |
| KIA | Besta Minibus - Furgon - Van | 2.2D/2.7D | | P7210 | F026407210 | | | DB0719 | 0986450719 | | |
| KIA | Besta Minibus - Furgon - Van | 2.2D/2.7D | | | | | | | | | |
| KIA | Besta Furgon - Van | 2.2-2.7Diesel | 97 => | OB0011 | 0986B00011 | | | DB0719 | 0986450719 | | |
| KIA | Besta Furgon - Van | 2.2-2.7Diesel | | | | | | | | | |
| KIA | Carens | 1.8i16v | | P7210 | F026407210 | | | | | | |
| KIA | Carens | 2.0CRDi | 06.06 => | | | | | N4314 | 1457434314 | | |
| KIA | Carnival | 2.916vTurboDiesel | | OB0011 | 0986B00011 | | | | | | |
| KIA | Carnival 2.9 CRDi | J3 | 07.06 => | | | | | N6508 | 0450906508 | | |
| KIA | Carnival 3.8 V6 24V | | 06 => | | | | | | | CB0566 | 0986BF0566 |
| KIA | Ceres | | | | | | | DB0719 | 0986450719 | | |
| KIA | | | | | | | | | | | |
| KIA | Cerato 1.6 16v | | 07 => | OB2354 | 0986452354 | | | | | CB0566 | 0986BF0566 |
| KIA | Cerato 2.0 CRDi | D4EA | 04 => | P7018 | F026407018 | | | N2010 | F026402010 | | |
| KIA | Clarus | 2.0i16v | 97 => | OB2354 | 0986452354 | | | | | | |
| KIA | K-2400 | | 90 => | | | | | DB0719 | 0986450719 | | |
| KIA | K-2400 | DobleCabina | 90 => | | | | | DB0719 | 0986450719 | | |
| KIA | K-2700 | 2.7Diesel | 08-97 => | | | | | DB0720 | 0986450720 | | |
| KIA | K-3500 - K 3600 | 3.6 | 90 => | OB0008 | 0986B00008 | | | DB0720 | 0986450720 | | |
| KIA | Picanto 1.1 | G4HG | 04.04 => | P7210 | F026407210 | | | | | | |
| KIA | Pride | 1.1i | | P7210 | F026407210 | | | | | | |
| KIA | Pride | 1.3i | | OB2354 | 0986452354 | | | | | | |

| MARCA | VEHÍCULO | MOTOR | FECHA | SC | ACEITE | SC | AIRE | SC | COMBUSTIBLE | SC | HABITÁCULO |
|---|---|---|---|---|---|---|---|---|---|---|---|
| KIA | Pregio | 2.7Diesel | | | | | | | | | |
| KIA | Sephia | 1.5i16v | | P7210 | F026407210 | | | | | | |
| KIA | Sorento 2.5 CRDi | D4CB | 07-02 => | | | S9180 | 1987429180 | N4310 | 1457434310 | CB0561 | 0986BF0561 |
| KIA | Sorento | 3.5i24v | 04 => | | | | | | | | |
| KIA | Sorento | 2.4WTG4KE | 02.10 => | OB2354 | 0986452354 | | | | | | |
| KIA | Soul 1.6 i | CWT | 09 => | OB2354 | 0986452354 | | | | | CB0567 | 0986BF0567 |
| KIA | Sportage | 2.0i | 92 => | | | | | | | | |
| KIA | Sportage II 2.0 CRDi | D4EA | 12.04 => 07.10 | P7018 | F026407018 | S0044 | F026400044 | N2010 | F026402010 | | |
| KIA | Sportage II 2.0i | G4GC | 12.04 => 07.10 | OB2354 | 0986452354 | S0044 | F026400044 | | | CB0562 | 0986BF0562 |
| KIA | Sportage | 2.2Diesel | | | | | | | | | |
| KIA | | | | P7210 | F026407210 | | | | | | |
| KIA | Sportage | 2.2Diesel | 97 => | | | | | DB0719 | 0986450719 | | |
| KIA | Sportage II 2.7 16V | | 05 => | OB2354 | 0986452354 | | | | | CB0562 | 0986BF0562 |
| MASSEY-FERGUSON | Tractores - Cosechadoras | | | | | | | | | | |
| MASSEY-FERGUSON | MF 150 - 155 - 165 | | 73 => | | | | | DB0695 | 0986450695 | | |
| MASSEY-FERGUSON | MF 150 - 155 - 165 | | | | | AB3534(P) | 0986B03534 | DB0695(S) | 0986450695 | | |
| MASSEY-FERGUSON | | | | | | | | | | | |
| MASSEY-FERGUSON | MF AX 160 L | | | | | AB3511(P) | 0986B03511 | DB0695 | 0986450695 | | |
| MASSEY-FERGUSON | | | | | | AB3903(S) | 0986B03903 | | | | |
| MASSEY-FERGUSON | MF 190 | | | OB3325 | 0451103325 | AB3526(P) | 0986B03526 | DB0695 | 0986450695 | | |
| MASSEY-FERGUSON | | | | | | AB3902(S) | 0986B03902 | | | | |
| MASSEY-FERGUSON | MF 195 | | 74 => | | | | | DB0695 | 0986450695 | | |
| MASSEY-FERGUSON | MF 250 | | 73 => | OB3325 | 0451103325 | AB3534(P) | 0986B03534 | DB0695 | 0986450695 | | |
| MASSEY-FERGUSON | | | | | | | | | | | |
| MASSEY-FERGUSON | MF 255 - 265 | | 82 => | OB3325 | 0451103325 | AB3534(P) | 0986B03534 | DB0695 | 0986450695 | | |
| MASSEY-FERGUSON | | | | | | | | | | | |
| MASSEY-FERGUSON | MF 34 - MF 38 | 8.3Cummins6CTA | 03 => | OB1011 | 0986B01011 | | | DB0519(P) | 0986450519 | | |
| MASSEY-FERGUSON | | | | | | | | DB0713(S) | 0986450713 | | |
| MASSEY-FERGUSON | | | | | | | | RB0583(SR) | 0986450583 | | |
| MASSEY-FERGUSON | MF 250 - 255 - 265 | | => 82 | OB1014 | 0986B01014 | AB3534(P) | 0986B03534 | DB0695 | 0986450695 | | |
| MASSEY-FERGUSON | | | | | | | | | | | |
| MASSEY-FERGUSON | MF 265 - 275 - 285 - 290 | | | OB3325 | 0451103325 | | | DB0694 | 0986450694 | | |
| MASSEY-FERGUSON | MF 275 | Perkins4.1 | | | | AB3002(P) | 0986B03002 | DB0695 | 0986450695 | | |
| MASSEY-FERGUSON | | | | | | AB3400(S) | 0986B03400 | | | | |
| MASSEY-FERGUSON | MF 283 | | | OB3325 | 0451103325 | | | DB0694 | 0986450694 | | |
| MASSEY-FERGUSON | MF 284 | | | OB3325 | 0451103325 | | | DB0695 | 0986450695 | | |
| MASSEY-FERGUSON | MF 290 | Perkins4.1 | | | | AB3004(P) | 0986B03004 | | | | |
| MASSEY-FERGUSON | | | | | | AB3402(S) | 0986B03402 | | | | |
| MASSEY-FERGUSON | MF 297 | Perkins6.0 | | | | AB3001(P) | 0986B03001 | | | | |

| MARCA | VEHÍCULO | MOTOR | FECHA | SC | ACEITE | SC | AIRE | SC | COMBUSTIBLE | SC | HABITÁCULO |
|---|---|---|---|---|---|---|---|---|---|---|---|
| MASSEY-FERGUSON | | | | | | AB3408(S) | 0986B03408 | | | | |
| MASSEY-FERGUSON | MF 362 | | | OB3325 | 0451103325 | | | DB0695 | 0986450695 | | |
| MASSEY-FERGUSON | MF 365 - 375 - 383 - 390 - 390 T - 398 | | | OB3325 | 0451103325 | | | DB0694 | 0986450694 | | |
| MASSEY-FERGUSON | MF 399 | | | OB1028 | 0986B01028 | | | DB0695 | 0986450695 | | |
| MASSEY-FERGUSON | MF 650 - 660 - 680 | | | OB1014 | 0986B01014 | AB3513(P) | 0986B03513 | DB0732 | 0986450732 | | |
| MASSEY-FERGUSON | | | | | | AB3905(S) | 0986B03905 | | | | |
| MASSEY-FERGUSON | MF 1078 - MF 1088 | | | | | | | DB0695 | 0986450695 | | |
| MASSEY-FERGUSON | MF 1095 - MF 1098 | | | | | | | DB0695 | 0986450695 | | |
| MASSEY-FERGUSON | MF 1175 - MF 1185 - MF 1195 | | | | | AB3511(P) | 0986B03511 | DB0695 | 0986450695 | | |
| MASSEY-FERGUSON | | | | | | AB3903(S) | 0986B03903 | | | | |
| MASSEY-FERGUSON | MF 1195 S - 1215 S | | | | | AB3535(P) | 0986B03535 | DB0695 | 0986450695 | | |
| MASSEY-FERGUSON | | | | OB3325 (H) | 0451103325 | AB3904(S) | 0986B03904 | | | | |
| MASSEY-FERGUSON | MF 1215 | | | OB1028 | 0986B01028 | AB3535(P) | 0986B03535 | DB0695 | 0986450695 | | |
| MASSEY-FERGUSON | | | | | | AB3904(S) | 0986B03904 | | | | |
| MASSEY-FERGUSON | MF 1340 S-2/ 54 Turbo | | | OB1028 | 0986B01028 | AB3535(P) | 0986B03535 | DB0695 | 0986450695 | | |
| MASSEY-FERGUSON | | | | | | AB3904(S) | 0986B03904 | | | | |
| MASSEY-FERGUSON | MF 1360 | | | | | AB3535(P) | 0986B03535 | DB0695 | 0986450695 | | |
| MASSEY-FERGUSON | | | | OB3325 (H) | 0451103325 | AB3904(S) | 0986B03904 | | | | |
| MASSEY-FERGUSON | MF 1360 S4 Turbo Interc. | | | OB1028 | 0986B01028 | AB3535(P) | 0986B03535 | DB0695 | 0986450695 | | |
| MASSEY-FERGUSON | | | | | | AB3904(S) | 0986B03904 | | | | |
| MASSEY-FERGUSON | MF 1465 | | | OB1014 | 0986B01014 | AB3534(P) | 0986B03534 | DB0694(P) | 0986450694 | | |
| MASSEY-FERGUSON | | | | | | | | DB0732(S) | 0986450732 | | |
| MASSEY-FERGUSON | MF 1475 - 1485 | | | OB1014 | 0986B01014 | AB3511(P) | 0986B03511 | DB0694(P) | 0986450694 | | |
| MASSEY-FERGUSON | | | | | | AB3903(S) | 0986B03903 | DB0732(S) | 0986450732 | | |
| MASSEY-FERGUSON | MF 1499 | | | OB3325 | 0451103325 | | | DB0694 | 0986450694 | | |
| MASSEY-FERGUSON | MF 1615 | | | OB1028 | 0986B01028 | AB3535(P) | 0986B03535 | DB0695 | 0986450695 | | |
| MASSEY-FERGUSON | | | | | | AB3904(S) | 0986B03904 | | | | |
| MASSEY-FERGUSON | MF 1640 - 1650 - 1660 | | | OB1028 | 0986B01028 | AB3513(P) | 0986B03513 | DB0695 | 0986450695 | | |
| MASSEY-FERGUSON | | | | | | AB3905(S) | 0986B03905 | | | | |
| MASSEY-FERGUSON | MF 1670 - 1680 - 1690 | | | OB1028 | 0986B01028 | AB3513(P) | 0986B03513 | DB0695 | 0986450695 | | |
| MASSEY-FERGUSON | | | | | | AB3905(S) | 0986B03905 | | | | |
| MASSEY-FERGUSON | MF 1690 Turbo intercooler | | | OB1014 | 0986B01014 | | | DB0695 | 0986450695 | | |
| MASSEY-FERGUSON | MF 5120 | Cummins | | OB1011 | 0986B01011 | | | DB0713(P) | 0986450713 | | |
| MASSEY-FERGUSON | | | | | | | | DB0519(S) | 0986450519 | | |
| MASSEY-FERGUSON | MF 5140 S-2/ 59 | | | OB1028 | 0986B01028 | AB3535(P) | 0986B03535 | DB0695 | 0986450695 | | |
| MASSEY-FERGUSON | | | | | | AB3904(S) | 0986B03904 | | | | |
| MASSEY-FERGUSON | MF 5160 | | | | | AB3535(P) | 0986B03535 | DB0695 | 0986450695 | | |
| MASSEY-FERGUSON | | | | OB3325 (H) | 0451103325 | AB3904(S) | 0986B03904 | | | | |
| MASSEY-FERGUSON | MF 5160 S-2/ 24 - MF 5190 | | | OB1028 | 0986B01028 | AB3535(P) | 0986B03535 | DB0695 | 0986450695 | | |

| MARCA | VEHÍCULO | MOTOR | FECHA | SC | ACEITE | SC | AIRE | SC | COMBUSTIBLE | SC | HABITÁCULO |
|---|---|---|---|---|---|---|---|---|---|---|---|
| MASSEY-FERGUSON | | | | | | AB3904(S) | 0986B03904 | | | | |
| MASSEY-FERGUSON | MF 5650 | | | OB1025 | 0986B01025 | AB3513(P) | 0986B03513 | | | | |
| MASSEY-FERGUSON | | | | | | AB3905(S) | 0986B03905 | | | | |
| MASSEY-FERGUSON | MF 6845 - 6850 | | | OB1025 | 0986B01025 | AB3513(P) | 0986B03513 | | | | |
| MASSEY-FERGUSON | | | | | | AB3905(S) | 0986B03905 | | | | |
| MASSEY-FERGUSON | MF 6855 | | | | | AB3515(P) | 0986B03515 | DB0224(Elem.SA) | 0986BF0224 | | |
| MASSEY-FERGUSON | | | | | | | | | | | |
| MAZDA | | | | | | | | | | | |
| MAZDA | 121 | 1.3i | | OB2354 | 0986452354 | | | | | CB0513 | 0986BF0513 |
| MAZDA | 323 | 1.6i16v | 91 => | OB2354 | 0986452354 | | | | | | |
| MAZDA | 323 | | 10-96 => | OB2354 | 0986452354 | | | | | | |
| MAZDA | 323 | 1.7TurboDiesel | 08-95 => 10-96 | | | | | DB0719 | 0986450719 | | |
| MAZDA | 323 | 2.0Diesel | 07-98 => | OB2354 | 0986452354 | | | | | | |
| MAZDA | 626 | 2.0 | 92 => | OB2354 | | S3605 | 1457433605 | | | | |
| MAZDA | | | | OB0002 | 0986B00002 | | | | | | |
| MAZDA | 626 | 2.0i16v | 98 => | | | | | | | | |
| MAZDA | 626 | 2.0TurboDiesel | | OB2354 | 0986452354 | | | | | | |
| MAZDA | 626 | 2.2i | | OB2354 | 0986452354 | | | | | | |
| MAZDA | 929 | 3.0i | | OB2354 | 0986452354 | | | | | | |
| MAZDA | B 2200 | 2.2i | | OB2354 | 0986452354 | | | | | | |
| MAZDA | B 2200 | 2.2i | | | | | | | | | |
| MAZDA | B 2500 DX CS-CD 4x2-4x4 | 2.5 Diesel | | OB0011 | 0986B00011 | | | DB0720 | 0986450720 | | |
| MAZDA | B 2500 DX CD 4x4 | 2.512vD | | P2062 | 0986452062 | | | | | | |
| MAZDA | B 2900 | 2.9 Diesel | | | | | | DB0721 | 0986450721 | | |
| MAZDA | E 2200 | 2.2i | 05.95 => 09.00 | OB0510 | 0986B00510 | | | | | | |
| MAZDA | E 3000 | | | | | | | DB0695 | 0986450695 | | |
| MAZDA | MPV | 3.0iV6 | | OB2354 | 0986452354 | | | | | | |
| MAZDA | MPV | 2.5iV624v | | P3333 | 0451103333 | | | | | | |
| MAZDA | MX 5 - Miata | 1.6i16v | | OB2354 | 0986452354 | | | | | | |
| MAZDA | MX 6 | 2.0i16v-2.516v | | OB0002 | 0986B00002 | | | | | | |
| MAZDA | RX 7 - Biturbo | Rotativo | | OB2354 | 0986452354 | | | | | | |
| MERCEDES BENZ | | | | | | | | | | | |
| MERCEDES BENZ | Clase A 160 CDi- Chasis 168 | OM668 | 02.01 => 08.04 | P9272 | 1457429272 | S3069 | 1457433069 | N5930 | 0450905930 | | |
| MERCEDES BENZ | A 160 | 1.6i-M166 | | P9147 | 1457429147 | S3715 | 1457433715 | F5001 | 0450915001 | | |
| MERCEDES BENZ | A 190 | 1.9i-M166 | | P9147 | 1457429147 | S3715 | 1457433715 | F5001 | 0450915001 | | |
| MERCEDES BENZ | Clase B 200 CDi- Chasis 245 | OM640 | 04.05 => | P9272 | 1457429272 | S3594 | 1457433594 | N4437 | 1457434437 | | |
| MERCEDES BENZ | 170 | 1.7i | 04.05 => | P9306 | 1457429306 | S3585 | 1457433585 | | | | |
| MERCEDES BENZ | 200 | 2.0i | 04.05 => | P9306 | 1457429306 | S3585 | 1457433585 | | | | |
| MERCEDES BENZ | 200 turbo | 2.0iTurbo | 04.05 => | P9306 | 1457429306 | S3585 | 1457433585 | | | | |

| MARCA | VEHÍCULO | MOTOR | FECHA | SC | ACEITE | SC | AIRE | SC | COMBUSTIBLE | SC | HABITÁCULO |
|---|---|---|---|---|---|---|---|---|---|---|---|
| MERCEDES BENZ | 200 CDI | 2.0Diesel | 06 => | | | | | | | | |
| MERCEDES BENZ | Clase C - Chasis 202 | | | | | | | | | | |
| MERCEDES BENZ | 180 - 180 T | M111 | | P9122 | 1457429122 | S3752 | 1457433752 | | | CB0500 | 0986BF0500 |
| MERCEDES BENZ | | | | | | | | F5275 | 0450905275 | | |
| MERCEDES BENZ | 200 - 200 T - 200 Kompressor | M111 | | P9122 | 1457429122 | S3752 | 1457433752 | | | CB0500 | 0986BF0500 |
| MERCEDES BENZ | | | | | | | | F5275 | 0450905275 | | |
| MERCEDES BENZ | 200 D | OM601 | => 08.95 | P9278 | 1457429278 | S3752 | 1457433752 | N4123 | 1457434123 | CB0500 | 0986BF0500 |
| MERCEDES BENZ | | | | P9274 | 1457429274 | | | | | | |
| MERCEDES BENZ | 200 D | OM604 | 09-95 => | P9278 | 1457429278 | S3752 | 1457433752 | N4123 | 1457434123 | CB0500 | 0986BF0500 |
| MERCEDES BENZ | 220 | M111 | | P9122 | 1457429122 | S3752 | 1457433752 | | | CB0500 | 0986BF0500 |
| MERCEDES BENZ | | | | | | | | F5275 | 0450905275 | | |
| MERCEDES BENZ | 220 CDI | OM611 | | P70001 | 1457437001 | S3752 | 1457433752 | N1704 | 1457431704 | | |
| MERCEDES BENZ | 220 D - 220 D T | OM604 | | P9278 | 1457429278 | S3752 | 1457433752 | N4123 | 1457434123 | CB0500 | 0986BF0500 |
| MERCEDES BENZ | | | | P9274 | 1457429274 | | | | | | |
| MERCEDES BENZ | 230 - 230 Kompressor - 230 T | M111 | | P9122 | 1457429122 | S3752 | 1457433752 | F5275 | 0450905275 | CB0500 | 0986BF0500 |
| MERCEDES BENZ | 240 - 240 T | M112 | | | | S3752 | 1457433752 | F5003 | 0450915003 | CB0500 | 0986BF0500 |
| MERCEDES BENZ | 240 GD | OM616.936 | 03.79 => 08.87 | | | | | DB0730 | 0986450730 | | |
| MERCEDES BENZ | 250-250 D Turbo-250 D Turbo T | OM605 | | P9278o | 1457429278 | S3752 | 1457433752 | N4123 | 1457434123 | CB0500 | 0986BF0500 |
| MERCEDES BENZ | 250-250 D Turbo-250 D Turbo T | OM605 | | P9274 | 1457429274 | | | | | | |
| MERCEDES BENZ | 280 | M104 | => 05.97 | P9122 | 1457429122 | S3752 | 1457433752 | | | CB0500 | 0986BF0500 |
| MERCEDES BENZ | 280 | M104 | | | | | | F5275 | 0450905275 | | |
| MERCEDES BENZ | 280 SE / SEL | M110.989 | 79 => 85 | | | | | | | | |
| MERCEDES BENZ | 280 - 280 T | M112 | 06-97 => | | | S3752 | 1457433752 | F5003 | 0450915003 | CB0500 | 0986BF0500 |
| MERCEDES BENZ | Clase C - Chasis 203 | | | | | | | | | | |
| MERCEDES BENZ | C 55 AMG | | | | | | | | | | |
| MERCEDES BENZ | C 200 Kompresor | M111 | | P9122 | 1457429122 | S3752 | 1457433752 | F5275 | 0450905275 | CB0500 | 0986BF0500 |
| MERCEDES BENZ | C 220 CDI | OM611 | | | | S3752 | 1457433752 | | | | |
| MERCEDES BENZ | C 220 CDI | 2.2OM646.963 | 02.04 => 12.07 | P70001 | 1457437001 | | | N4437 | 1457434437 | | |
| MERCEDES BENZ | C 220 CDI Blue efficiency | 2.1OM651.911/912 | 01.11=> | OB0714 | 0986B00714 | | | N2840 | F026402840 | | |
| MERCEDES BENZ | C 230 Kompresor | M111 | | P9122 | 1457429122 | | | F5003 | 0450915003 | | |
| MERCEDES BENZ | C 240 - C 240 T | M112 | | | | S3752 | 1457433752 | F5003 | 0450915003 | | |
| MERCEDES BENZ | C 270 CDI | OM612 | | P70001 | 1457437001 | | | | | | |
| MERCEDES BENZ | C 320 | M112 | | | | | | F5003 | 0450915003 | | |
| MERCEDES BENZ | C 320 CDI | OM642.910 | 02.05 = > 12.07 | P7008 | F026407008 | | | N4437 | 1457434437 | | |
| MERCEDES BENZ | C 350 | | | | | | | | | | |
| MERCEDES BENZ | Clase CL - Chasis 215 | | | | | | | | | | |
| MERCEDES BENZ | CL 55 AMG | M113 | => 08.02 | | | | | F5003 | 0450915003 | | |
| MERCEDES BENZ | | | 09-02 => | | | | | F5275 | 0450905275 | | |
| MERCEDES BENZ | CL 500 | M113 | | | | | | F5003 | 0450915003 | | |

| MARCA | VEHÍCULO | MOTOR | FECHA | SC | ACEITE | SC | AIRE | SC | COMBUSTIBLE | SC | HABITÁCULO |
|---|---|---|---|---|---|---|---|---|---|---|---|
| MERCEDES BENZ | Clase CLK - Chasis 209 | | | | | | | | | | |
| MERCEDES BENZ | 55 AMG | M113 | | | | | | F5003 | 0450915003 | | |
| MERCEDES BENZ | 320 | M112 | | | | | | F5003 | 0450915003 | | |
| MERCEDES BENZ | 350 | | | | | | | | | | |
| MERCEDES BENZ | 500 | M113 | | | | | | F5003 | 0450915003 | | |
| MERCEDES BENZ | Clase CLK - Chasis 208 | | | | | | | | | | |
| MERCEDES BENZ | 230 Kompressor | M111 | | P9122 | 1457429122 | S3752 | 1457433752 | | | CB0500 | 0986BF0500 |
| MERCEDES BENZ | | | | | | | | F5275 | 0450905275 | | |
| MERCEDES BENZ | 320 | M112 | | | | S3752 | 1457433752 | F5003 | 0450915003 | CB0500 | 0986BF0500 |
| MERCEDES BENZ | 430 | M113 | | | | | | F5003 | 0450915003 | CB0500 | 0986BF0500 |
| MERCEDES BENZ | Clase CLS - Chasis 219 | | | | | | | | | | |
| MERCEDES BENZ | 55 Kompresor AMG | | | | | | | | | | |
| MERCEDES BENZ | 350 | | | | | | | | | | |
| MERCEDES BENZ | 500 | | | | | | | | | | |
| MERCEDES BENZ | Clase E - Chasis 211 | | | | | | | | | | |
| MERCEDES BENZ | 55 Kompresor AMG | | | | | | | | | | |
| MERCEDES BENZ | 270 CDI | | | P70001 | 1457437001 | | | | | | |
| MERCEDES BENZ | 320 | | | | | | | | | | |
| MERCEDES BENZ | 320 CDI | | | | | | | | | | |
| MERCEDES BENZ | 350 | | | | | | | | | | |
| MERCEDES BENZ | 500 | | | | | | | F5003 | 0450915003 | | |
| MERCEDES BENZ | Clase E - Chasis 124 | | | | | | | | | | |
| MERCEDES BENZ | 200 - Coupé - Cabrio - 200 T | M111 | | P9122 | 1457429122 | | | | | | |
| MERCEDES BENZ | 220 - Coupé - Cabrio - 220 T | M111 | | P9122 | 1457429122 | | | F5203 | 0450905203 | | |
| MERCEDES BENZ | | | | | | | | F5275 | 0450905275 | | |
| MERCEDES BENZ | 200 D | OM601 | | P9274 | 1457429274 | S9875 | 1457429875 | N4123 | 1457434123 | | |
| MERCEDES BENZ | 250 D | OM605 | | P9274 | 1457429274 | S3002 | 1457433002 | N4123 | 1457434123 | | |
| MERCEDES BENZ | | | | P9278 | 1457429278 | | | | | | |
| MERCEDES BENZ | 300 D - 300 TD | OM606 | | P9274 | 1457429274 | S3002 | 1457433002 | N4123 | 1457434123 | | |
| MERCEDES BENZ | 300 TD Turbo | OM603 | | P9274 | 1457429274 | | | N4123 | 1457434123 | | |
| MERCEDES BENZ | 300 | M103 | | P3105 | 0451103105 | S9970 | 1457429970 | F5177 | 0450905177 | | |
| MERCEDES BENZ | 320 | M104 | | P9122 | 1457429122 | | | F5177 | 0450905177 | | |
| MERCEDES BENZ | 320 Cabrio - 320 Coupe - 320 T | M104 | | P9122 | 1457429122 | | | | | | |
| MERCEDES BENZ | Clase E - Chasis 210 | | | | | | | | | | |
| MERCEDES BENZ | 230 | M111 | | P9122 | 1457429122 | S3699 | 1457433699 | F5275 | 0450905275 | CB0500 | 0986BF0500 |
| MERCEDES BENZ | 220 D | OM604 | | P9278 | 1457429278 | S3699 | 1457433699 | N4123 | 1457434123 | CB0500 | 0986BF0500 |
| MERCEDES BENZ | 240 | M112 | | | | S3699 | 1457433699 | F5003 | 0450915003 | CB0500 | 0986BF0500 |
| MERCEDES BENZ | 270 CDI | | | P70001 | 1457437001 | | | | | | |
| MERCEDES BENZ | 290 D Turbo | OM602 | | P9278 | 1457429278 | S3699 | 1457433699 | N4123 | 1457434123 | CB0500 | 0986BF0500 |

| MARCA | VEHÍCULO | MOTOR | FECHA | SC | ACEITE | SC | AIRE | SC | COMBUSTIBLE | SC | HABITÁCULO |
|---|---|---|---|---|---|---|---|---|---|---|---|
| MERCEDES BENZ | 300 D - 300 D Turbo | OM606 | | P9278 | 1457429278 | S3699 | 1457433699 | N4123 | 1457434123 | CB0500 | 0986BF0500 |
| MERCEDES BENZ | 320 | M104 | | P9122 | 1457429122 | S3699 | 1457433699 | F5275 | 0450905275 | CB0500 | 0986BF0500 |
| MERCEDES BENZ | 320 - 320 T | M112 | | | | S3699 | 1457433699 | F5003 | 0450915003 | CB0500 | 0986BF0500 |
| MERCEDES BENZ | 320 CDI | | | | | | | N1704 | 1457431704 | | |
| MERCEDES BENZ | 420 | M119 | | P9616 | 1457429616 | S3699 | 1457433699 | F5275 | 0450905275 | CB0500 | 0986BF0500 |
| MERCEDES BENZ | 430 | M113 | | | | S3699 | 1457433699 | F5003 | 0450915003 | CB0500 | 0986BF0500 |
| MERCEDES BENZ | Clase M - Chasis 164 | | | | | | | | | | |
| MERCEDES BENZ | 320 CDI | | | | | | | | | | |
| MERCEDES BENZ | 350 | | | | | | | | | | |
| MERCEDES BENZ | 500 | | | | | | | | | | |
| MERCEDES BENZ | Clase M - Chasis 163 | | | | | | | | | | |
| MERCEDES BENZ | ML 230 | M111 | | P9122 | 1457429122 | S3752 | 1457433752 | F5275 | 0450905275 | R2364 (CA) | 1987432364 |
| MERCEDES BENZ | ML 270 CDI | OM612 | | P70001 | 1457437001 | | | | | | |
| MERCEDES BENZ | ML 320 | M112 | | P9122 | 1457429122 | S3752 | 1457433752 | F5275 | 0450905275 | R2364 (CA) | 1987432364 |
| MERCEDES BENZ | ML 350 | M112 | | | | S3752 | 1457433752 | | | | |
| MERCEDES BENZ | ML 400 CDI | OM628 | | | | S3752 | 1457433752 | | | | |
| MERCEDES BENZ | ML 430 | M113 | | | | S3699 | 1457433699 | F5003 | 0450915003 | R2364 (CA) | 1987432364 |
| MERCEDES BENZ | ML 500 | M113 | | | | S3752 | 1457433752 | | | | |
| MERCEDES BENZ | Clase S - Chasis 221 | | | | | | | | | | |
| MERCEDES BENZ | 500 | M113 | | | | | | F5003 | 0450915003 | | |
| MERCEDES BENZ | Clase S - Chasis 140 | | | | | | | | | | |
| MERCEDES BENZ | 280 - 320 | M104 | | P9122 | 1457429122 | | | F5177 | 0450905177 | | |
| MERCEDES BENZ | 300 D Turbo | OM606 | | P9278 | 1457429278 | | | N4123 | 1457434123 | | |
| MERCEDES BENZ | 350 D | OM603 | | P9274 | 1457429274 | | | N4123 | 1457434123 | | |
| MERCEDES BENZ | 420 - 420 Coupé - 500 Coupé | M119 | | P9616 | 1457429616 | S3700 | 1457433700 | | | | |
| MERCEDES BENZ | | | | | | | | F5275 | 0450905275 | | |
| MERCEDES BENZ | 500 | M119 | | P9616 | 1457429616 | S3700 | 1457433700 | F5177 | 0450905177 | | |
| MERCEDES BENZ | 600 | M120 | | | | | | F5177 | 0450905177 | | |
| MERCEDES BENZ | Clase S - Chasis 220 | | | | | | | | | | |
| MERCEDES BENZ | S 320 | M112 | | | | | | F5003 | 0450915003 | | |
| MERCEDES BENZ | S 500 | M113 | | | | | | F5003 | 0450915003 | | |
| MERCEDES BENZ | Clase SL - Chasis 230 | | | | | | | | | | |
| MERCEDES BENZ | 55 Kompresor AMG | M113 | | | | | | F5275 | 0450905275 | | |
| MERCEDES BENZ | 500 | 113 | | | | | | F5003 | 0450915003 | | |
| MERCEDES BENZ | Clase SL - Chasis 129 | | | | | | | | | | |
| MERCEDES BENZ | 280 | M104 | | P9122 | 1457429122 | | | F5177 | 0450905177 | | |
| MERCEDES BENZ | 280 | M112 | | | | | | F5275 | 0450905275 | | |
| MERCEDES BENZ | 320 | M104 | | P9122 | 1457429122 | | | F5177 | 0450905177 | | |
| MERCEDES BENZ | 320 | M112 | | | | | | F5275 | 0450905275 | | |

| MARCA | VEHÍCULO | MOTOR | FECHA | SC | ACEITE | SC | AIRE | SC | COMBUSTIBLE | SC | HABITÁCULO |
|---|---|---|---|---|---|---|---|---|---|---|---|
| MERCEDES BENZ | 500 | M119 | | P9616 | 1457429616 | S3700 | 1457433700 | F5177 | 0450905177 | | |
| MERCEDES BENZ | 500 | M113 | | P9616 | 1457429616 | | | | | | |
| MERCEDES BENZ | 600 | M120 | | | | | | F5275 | 0450905275 | | |
| MERCEDES BENZ | Clase SLK - Chasis 170 | | | | | | | | | | |
| MERCEDES BENZ | 230 Kompressor | M111 | | P9122 | 1457429122 | S3751 | 1457433751 | F5275 | 0450905275 | CB0500 | 0986BF0500 |
| MERCEDES BENZ | 320 | M112 | | | | | | F5003 | 0450915003 | CB0500 | 0986BF0500 |
| MERCEDES BENZ | Clase SLK - Chasis 171 | | | | | | | | | | |
| MERCEDES BENZ | 55 AMG | M113 | | | | | | | | | |
| MERCEDES BENZ | 200 | M271 | | | | | | | | | |
| MERCEDES BENZ | 350 | M272 | | | | | | | | | |
| MERCEDES BENZ | Clase V - Chasis 638 | | | | | | | | | | |
| MERCEDES BENZ | Viano 2.0 CDI | OM646 | 09.03 = >12.06 | P70001 | 1457437001 | | | N4437 | 1457434437 | | |
| MERCEDES BENZ | Viano 2.2 CDI | OM646 | 09.03 = >08.10 | P70001 | 1457437001 | | | N4437 | 1457434437 | | |
| MERCEDES BENZ | Viano 2.2 CDI | OM651LA | 04.13=> | OB0714 | 0986B00714 | | | N2840 | F026402840 | | |
| MERCEDES BENZ | Viano 2.3 TD | OM601 | | P9274 | 1457429274 | S3753 | 1457433753 | N4123 | 1457434123 | | |
| MERCEDES BENZ | Viano 2.3 | M111 | | P9122 | 1457429122 | S3753 | 1457433753 | F5275 | 0450905275 | | |
| MERCEDES BENZ | Vito 2.2 CDI | OM611 | | P70001 | 1457437001 | | | N5930 | 0450905930 | | |
| MERCEDES BENZ | Vito 2.3 TD | OM601 | | P9122 | 1457429122 | S3753 | 1457433753 | F5275 | 0450905275 | | |
| MERCEDES BENZ | Chasis 124 | | | | | | | | | | |
| MERCEDES BENZ | 200 E - 200 TE | M102 | => 88 | P3105 | 0451103105 | S9992 | 1457429992 | | | | |
| MERCEDES BENZ | | | 89 => | P3105 | 0451103105 | S9787 | 1457429787 | | | | |
| MERCEDES BENZ | | M111 | 92 => | P9122 | 1457429122 | | | | | | |
| MERCEDES BENZ | 200 CE | M102 | | P3105 | 0451103105 | S9787 | 1457429787 | | | | |
| MERCEDES BENZ | | M111 | | P9122 | 1457429122 | | | | | | |
| MERCEDES BENZ | 200 D - TD | OM601 | | P9274 | 1457429274 | S9875 | 1457429875 | N4123 | 1457434123 | | |
| MERCEDES BENZ | 220 CE - 220 E - 220 TE | M111 | | P9122 | 1457429122 | | | | | | |
| MERCEDES BENZ | 230 CE - 230 TE | M102 | | P3105 | 0451103105 | S9787 | 1457429787 | F5203 | 0450905203 | | |
| MERCEDES BENZ | 230 E | M102 | | P3105 | 0451103105 | S9787 | 1457429787 | F5203 | 0450905203 | | |
| MERCEDES BENZ | 250 D - 250 TD | OM602 | | P9274 | 1457429274 | S9783 | 1457429783 | N4123 | 1457434123 | | |
| MERCEDES BENZ | 250 D Turbo | OM602 | | P9274 | 1457429274 | S3002 | 1457433002 | N4123 | 1457434123 | | |
| MERCEDES BENZ | 300 CE - 300 TE | M103 | | P3105 | 0451103105 | S9970 | 1457429970 | F5203 | 0450905203 | | |
| MERCEDES BENZ | 300 CE - 24 Cabrio/ Coupé | M104 | | P9122 | 1457429122 | | | F5177 | 0450905177 | | |
| MERCEDES BENZ | 300 D - 300 TD | OM603 | | P9274 | 1457429274 | S9988 | 1457429988 | N4123 | 1457434123 | | |
| MERCEDES BENZ | Chasis 140 | | | | | | | | | | |
| MERCEDES BENZ | 280 SE | M104 | | P9122 | 1457429122 | | | F5177 | 0450905177 | | |
| MERCEDES BENZ | 300 SE/ SEL | M104 | | P9122 | 1457429122 | | | F5177 | 0450905177 | | |
| MERCEDES BENZ | 500 SE/ SEL | M119 | | P9616 | 1457429616 | S3700 | 1457433700 | F5177 | 0450905177 | | |
| MERCEDES BENZ | 500 SEC | M119 | | P9616 | 1457429616 | S3700 | 1457433700 | F5203 | 0450905203 | | |
| MERCEDES BENZ | Chasis 201 | | | | | | | | | | |

| MARCA | VEHÍCULO | MOTOR | FECHA | SC | ACEITE | SC | AIRE | SC | COMBUSTIBLE | SC | HABITÁCULO |
|---|---|---|---|---|---|---|---|---|---|---|---|
| MERCEDES BENZ | 190 D | OM601 | | P9274 | 1457429274 | S9875 | 1457429875 | N4123 | 1457434123 | | |
| MERCEDES BENZ | 190 D | OM602 | | P9274 | 1457429274 | S9783 | 1457429783 | N4123 | 1457434123 | | |
| MERCEDES BENZ | 190 D Turbo 2.5 | OM602 | | P9274 | 1457429274 | S3002 | 1457433002 | N4123 | 1457434123 | | |
| MERCEDES BENZ | 190 E | M102-2.0-2.3 | | P3105 | 0451103105 | S9787 | 1457429787 | F5203 | 0450905203 | | |
| MERCEDES BENZ | 190 E | M102-2.5 | | P9606 | 1457429606 | | | F5177 | 0450905177 | | |
| MERCEDES BENZ | 190 | M102-2.0 | => 93 | | | | | | | | |
| MERCEDES BENZ | COMERCIALES | | | | | | | | | | |
| MERCEDES BENZ | MB 180 2.4D | OM616 | 04.94 => 09.96 | | | | | DB0730 | 0986450730 | | |
| MERCEDES BENZ | Sprinter | 2.5DieselMaxion | | OB1026 | 0986B01026 | AB3531(P) | 0986B03531 | DB0732 | 0986450732 | CB0516 | 0986BF0516 |
| MERCEDES BENZ | | | | | | AB3904(S) | 0986B03904 | | | | |
| MERCEDES BENZ | Sprinter 310/312/412 | OM014A-Maxion2.5D | => 98 | OB1026 | 0986B01026 | AB2281 | 1457432281 | DB0712 | 0986450712 | CB0516 | 0986BF0516 |
| MERCEDES BENZ | Sprinter | OM6112.2CDI | 99 => 03-00 | OB1026 | 0986B01026 | AB2281 | 1457432281 | N5930 | 0450905930 | CB0516 | 0986BF0516 |
| MERCEDES BENZ | Sprinter 308 - 311 - 313 - 413 | OM6112.2CDI | 04-00 => | P70001 | 1457437001 | AB2281 | 1457432281 | N5930 | 0450905930 | CB0516 | 0986BF0516 |
| MERCEDES BENZ | Sprinter 308 - 311 - 313 - 413 | | | | | | | N2044(c.sensor) | F026402044 | | |
| MERCEDES BENZ | Sprinter 311/313/411 CDI | Electronico | 06.01 => 12.04 | | | | | DB0216(Elem.SA) | 0986BF0216 | | |
| MERCEDES BENZ | Sprinter | 2.2CDIOM6112.2CDI | 02 => | P70001 | 1457437001 | AB2281 | 1457432281 | N5930 | 0450905930 | CB0516 | 0986BF0516 |
| MERCEDES BENZ | Sprinter II 411/415/515 | 2.2CDIOM651LA | 04.12 => | OB0714 | 0986B00714 | AB2537 | 0986B02537 | N2840 | F026402840 | CB0658 | 0986BF0658 |
| MERCEDES BENZ | L 608 D | OM314 | | | | | | DB0200 | 0986BF0200 | | |
| MERCEDES BENZ | | | | | | AB3534 | 0986B03534 | | | | |
| MERCEDES BENZ | L 709 D | OM364Aleman | | OB1012 | 0986B01012 | S3601 | 1457433601 | DB0704 | 0986450704 | | |
| MERCEDES BENZ | L 709 D - L 710 D | OM364Brasil | | OB1555 | 0986B01555 | AB3526(P) | 0986B03526 | DB0200 | 0986BF0200 | | |
| MERCEDES BENZ | | | | OB1012 | 0986B01012 | AB3902(S) | 0986B03902 | DB0704 | 0986450704 | | |
| MERCEDES BENZ | L 709 D - L 710 D | OM364Brasil | | HB1652(DH) | 0986B01652 | | | DB0702 | 0986450702 | | |
| MERCEDES BENZ | 710 | OM364LA | 98 =>04 | OB1555 | 0986B01555 | AB3531(P) | 0986B03531 | DB0702 | 0986450702 | | |
| MERCEDES BENZ | | | | OB1012 | 0986B01012 | AB3904(S) | 0986B03904 | DB0707(BoxSA) | 0986450707 | | |
| MERCEDES BENZ | | | | | | | | DB0217(Elem.SA) | 0986BF0217 | | |
| MERCEDES BENZ | 710 | OM364LA | 04 = > | OB1012 | 0986B01012 | AB3535 | 0986B03535 | DB0702 | 0986450702 | | |
| MERCEDES BENZ | | | | HB1652(DH) | 0986B01652 | AB3904(S) | 0986B03904 | DB0200 | 0986BF0200 | | |
| MERCEDES BENZ | | | 07 => | | | | | DB0366 | 0986BF0366 | | |
| MERCEDES BENZ | | | | | | | | DB0213(Elem.SA) | 0986BF0213 | | |
| MERCEDES BENZ | L 710 D | OM364 | | OB1555 | 0986B01555 | AB3526 | 0986B03526 | DB0200 | 0986BF0200 | | |
| MERCEDES BENZ | | | | OB1012 | 0986B01012 | | | DB0704 | 0986450704 | | |
| MERCEDES BENZ | L 710 D | | | HB1652(DH) | 0986B01652 | | | DB0217(Elem.SA) | 0986BF0217 | | |
| MERCEDES BENZ | 712 C | OM904L/LA | 98 => | OB1557 | 0986B01557 | AB2289(P) | 1457432289 | DB0201(S) | 0986BF0201 | | |
| MERCEDES BENZ | | | | HB1652(DH) | 0986B01652 | AB3405(S) | 0986B03405 | DB0727(BoxSA) | 0986450727 | | |
| MERCEDES BENZ | | | | | | | | DB0223(Elem.SA) | 0986BF0223 | | |
| MERCEDES BENZ | | | | | | | | DB0214(Elem.SA) | 0986BF0214 | | |
| MERCEDES BENZ | 809 | OM364 | 83 => 93 | OB1555 | 0986B01555 | AB2289(P) | 1457432289 | DB0200 | 0986BF0200 | | |
| MERCEDES BENZ | 809 | OM364 | | HB1652(DH) | 0986B01652 | AB3405(S) | 0986B03405 | DB0704 | 0986450704 | | |

| MARCA | VEHÍCULO | MOTOR | FECHA | SC | ACEITE | SC | AIRE | SC | COMBUSTIBLE | SC | HABITÁCULO |
|---|---|---|---|---|---|---|---|---|---|---|---|
| MERCEDES BENZ | | | | | | | | DB0702 | 0986450702 | | |
| MERCEDES BENZ | L 810 | OM364 | | OB1555 | 0986B01555 | AB3526 | 0986B03526 | DB0200 | 0986BF0200 | | |
| MERCEDES BENZ | | | | OB1012 | 0986B01012 | | | DB0704 | 0986450704 | | |
| MERCEDES BENZ | L 810 | OM364 | | HB1652(DH) | 0986B01652 | | | | | | |
| MERCEDES BENZ | LO 813 D | OM364A | | OB1555 | 0986B01555 | AB3511(P) | 0986B03511 | DB0200 | 0986BF0200 | | |
| MERCEDES BENZ | | | | OB1012 | 0986B01012 | | | DB0704 | 0986450704 | | |
| MERCEDES BENZ | LO 813 D | OM364A | | HB1652(DH) | 0986B01652 | | | | | | |
| MERCEDES BENZ | L/LO 814 | OM364LA | 98 => | OB1555 | 0986B01555 | AB3531(P) | 0986B03531 | DB0200 | 0986BF0200 | | |
| MERCEDES BENZ | | | | HB1652(DH) | 0986B01652 | AB3904(S) | 0986B03904 | DB0704 | 0986450704 | | |
| MERCEDES BENZ | | | | | | | | DB0702 | 0986450702 | | |
| MERCEDES BENZ | | | | | | | | DB0217(Elem.SA) | 0986BF0217 | | |
| MERCEDES BENZ | 814 - LO 814 | OM356-366 | | OB1555 | 0986B01555 | AB3535(P) | 0986B03535 | DB0200 | 0986BF0200 | | |
| MERCEDES BENZ | | | | OB1556 | 0986B01556 | AB3904(S) | 0986B03904 | DB0704 | 0986450704 | | |
| MERCEDES BENZ | 814 - LO 814 | OM356-366 | | HB1652(DH) | 0986B01652 | | | DB0702 | 0986450702 | | |
| MERCEDES BENZ | L 910 | OM364 | | OB1555 | 0986B01555 | AB3526 | 0986B03526 | DB0200 | 0986BF0200 | | |
| MERCEDES BENZ | | | | OB1012 | 0986B01012 | | | DB0704 | 0986450704 | | |
| MERCEDES BENZ | L 910 | OM364 | | HB1652(DH) | 0986B01652 | | | | | | |
| MERCEDES BENZ | L 913 D | OM364A | | OB1555 | 0986B01555 | AB3511(P) | 0986B03511 | DB0200 | 0986BF0200 | | |
| MERCEDES BENZ | | | | OB1012 | 0986B01012 | | | DB0704 | 0986450704 | | |
| MERCEDES BENZ | L 913 D | OM364A | | HB1652(DH) | 0986B01652 | | | | | | |
| MERCEDES BENZ | 914 C | OM904LA | | OB1557 | 0986B01557 | AB2289 | 1457432289 | DB0201(S) | 0986BF0201 | | |
| MERCEDES BENZ | 914 C | OM904LA | | HB1652(DH) | 0986B01652 | AB3405(S) | 0986B03405 | DB0727(Box.SA) | 0986450727 | | |
| MERCEDES BENZ | | | | | | | | DB0223(Elem.SA) | 0986BF0223 | | |
| MERCEDES BENZ | | | | | | | | DB0214(Elem.SA) | 0986BF0214 | | |
| MERCEDES BENZ | 914 | OM364LA | 98 => | OB1555 | 0986B01555 | AB3511(P) | 0986B03511 | DB0200 | 0986BF0200 | | |
| MERCEDES BENZ | | | | OB1012 | 0986B01012 | AB3904(S) | 0986B03904 | DB0704 | 0986450704 | | |
| MERCEDES BENZ | 914 | OM364LA | | HB1652(DH) | 0986B01652 | | | DB0702 | 0986450702 | | |
| MERCEDES BENZ | 914 | OM356-OM366 | 87 => 93 | OB1555 | 0986B01555 | | | DB0200 | 0986BF0200 | | |
| MERCEDES BENZ | 914 | OM356-OM366 | | HB1652(DH) | 0986B01652 | | | DB0704 | 0986450704 | | |
| MERCEDES BENZ | L 914 | OM364LA | | OB1555 | 0986B01555 | AB3511(P) | 0986B03511 | DB0200 | 0986BF0200 | | |
| MERCEDES BENZ | L 914 | OM364LA | | OB1012 | 0986B01012 | AB3903(S) | 0986B03903 | DB0704 | 0986450704 | | |
| MERCEDES BENZ | L 914 | OM364LA | | | | | | DB0217(Elem.SA) | 0986BF0217 | | |
| MERCEDES BENZ | L 914 | OM364LA | | HB1652(DH) | 0986B01652 | | | DB0702 | 0986450702 | | |
| MERCEDES BENZ | KO 914 | OM366 | | OB1555 | 0986B01555 | | | DB0200 | 0986BF0200 | | |
| MERCEDES BENZ | | | | OB1556 | 0986B01556 | | | DB0704 | 0986450704 | | |
| MERCEDES BENZ | KO 914 | OM366 | | HB1652(DH) | 0986B01652 | | | | | | |
| MERCEDES BENZ | L 1114 - LO 1114 | OM352 | 84 => | OB1565 | 0986B01565 | AB3535(P) | 0986B03535 | DB0200 | 0986BF0200 | | |
| MERCEDES BENZ | L 1114 - LO 1114 | OM352 | | HB1652(DH) | 0986B01652 | AB3904(S) | 0986B03904 | DB0704 | 0986450704 | | |
| MERCEDES BENZ | 1114 | OM356-OM366 | 84 => 93 | OB1555 | 0986B01555 | AB3535(P) | 0986B03535 | DB0702 | 0986450702 | | |

| MARCA | VEHÍCULO | MOTOR | FECHA | SC | ACEITE | SC | AIRE | SC | COMBUSTIBLE | SC | HABITÁCULO |
|---|---|---|---|---|---|---|---|---|---|---|---|
| MERCEDES BENZ | | | | OB1556 | 0986B01556 | AB3904(S) | 0986B03904 | DB0200 | 0986BF0200 | | |
| MERCEDES BENZ | 1114 | OM356-OM366 | | HB1652(DH) | 0986B01652 | | | DB0704 | 0986450704 | | |
| MERCEDES BENZ | 1214 | OM364LA | | OB1555 | 0986B01555 | AB3511(P) | 0986B03511 | DB0200 | 0986BF0200 | | |
| MERCEDES BENZ | | | | OB1012 | 0986B01012 | AB3903(S) | 0986B03903 | DB0704 | 0986450704 | | |
| MERCEDES BENZ | 1214 C | OM364LA | 98 => | OB1555 | 0986B01555 | AB3531(P) | 0986B03531 | DB0709(BoxSA) | 0986450709 | | |
| MERCEDES BENZ | | | | HB1652(DH) | 0986B01652 | AB3904(S) | 0986B03904 | DB0220(Elem.SA) | 0986BF0220 | | |
| MERCEDES BENZ | 1214 R | OM366A | | OB1556 | 0986B01556 | AB3535(P) | 0986B03535 | DB0709(BoxSA) | 0986450709 | | |
| MERCEDES BENZ | | | | | | AB3904(S) | 0986B03904 | DB0220(Elem.SA) | 0986BF0220 | | |
| MERCEDES BENZ | 1214 - L 1214 - 1214 K | OM366 | | OB1556 | 0986B01556 | AB3535(P) | 0986B03535 | DB0709(BoxSA) | 0986450709 | | |
| MERCEDES BENZ | 1214 - L 1214 - 1214 K | OM366 | | HB1652(DH) | 0986B01652 | AB3904(S) | 0986B03904 | DB0200 | 0986BF0200 | | |
| MERCEDES BENZ | | | | | | | | DB0220(Elem.SA) | 0986BF0220 | | |
| MERCEDES BENZ | K 1214 | OM366A/LA | 96 => | OB1012 | 0986B01012 | AB3537(P) | 0986B03537 | DB0709(BoxSA) | 0986450709 | | |
| MERCEDES BENZ | K 1214 | OM366A/LA | | HB1652(DH) | 0986B01652 | | | DB0220(Elem.SA) | 0986BF0220 | | |
| MERCEDES BENZ | OF 1214 | OM352 | 84 => | OB1565 | 0986B01565 | AB3535(P) | 0986B03535 | DB0200 | 0986BF0200 | | |
| MERCEDES BENZ | OF 1214 | OM352 | | HB1652(DH) | 0986B01652 | AB3904(S) | 0986B03904 | DB0704 | 0986450704 | | |
| MERCEDES BENZ | 1215 C | OM904LA | 98 => | OB1557 | 0986B01557 | AB2289(P) | 1457432289 | DB0201 | 0986BF0201 | | |
| MERCEDES BENZ | 1215 C | OM904LA | | HB1652(DH) | 0986B01652 | AB3405(S) | 0986B03405 | DB0727(BoxSA) | 0986450727 | | |
| MERCEDES BENZ | | | | | | Z8250(Secador) | 0986628250 | DB0214(Elem.SA) | 0986BF0214 | | |
| MERCEDES BENZ | L - LK 1215 | OM366 | | OB1556 | 0986B01556 | AB3511(P) | 0986B03511 | DB0200 | 0986BF0200 | | |
| MERCEDES BENZ | | | | OB1012 | 0986B01012 | AB3903(S) | 0986B03903 | DB0704 | 0986450704 | | |
| MERCEDES BENZ | L - LK 1215 | OM366 | | HB1652(DH) | 0986B01652 | | | DB0702 | 0986450702 | | |
| MERCEDES BENZ | L - LK 1218 R | OM904LA | 98 => | OB1557 | 0986B01557 | AB2288(P) | 1457432288 | DB0201(S) | 0986BF0201 | | |
| MERCEDES BENZ | | | | | | | | DB0727(BoxSA) | 0986450727 | | |
| MERCEDES BENZ | | | | | | | | DB0214(Elem.SA) | 0986BF0214 | | |
| MERCEDES BENZ | 1218 Electrónico | OM904LA | 01.08 => | OB1557 | 0986B01557 | AB2289(P) | 1457432289 | DB0201(S) | 0986BF0201 | | |
| MERCEDES BENZ | 1218 Electrónico | OM904LA | | HB1652(DH) | 0986B01652 | AB3405(S) | 0986B03405 | DB0350 | 0986BF0350 | | |
| MERCEDES BENZ | 1218 - L 1218 | OM366A | | OB1556 | 0986B01556 | AB3535(P) | 0986B03535 | DB0200 | 0986BF0200 | | |
| MERCEDES BENZ | 1218 - L 1218 | OM366A | | HB1652(DH) | 0986B01652 | AB3904(S) | 0986B03904 | DB0704 | 0986450704 | | |
| MERCEDES BENZ | 1218 | OM366A/LA | 96 => | OB1012 | 0986B01012 | AB3537(P) | 0986B03537 | DB0200 | 0986BF0200 | | |
| MERCEDES BENZ | 1218 | OM366A/LA | | HB1652(DH) | 0986B01652 | | | DB0704 | 0986450704 | | |
| MERCEDES BENZ | 1414 - L 1414 - 1414 K | OM366 | | OB1556 | 0986B01556 | AB3535(P) | 0986B03535 | DB0200 | 0986BF0200 | | |
| MERCEDES BENZ | 1414 - L 1414 - 1414 K | OM366 | | HB1652(DH) | 0986B01652 | AB3904(S) | 0986B03904 | DB0709(BoxSA) | 0986450709 | | |
| MERCEDES BENZ | | | | | | | | DB0220(Elem.SA) | 0986BF0220 | | |
| MERCEDES BENZ | 1418 R | OM366A | | OB1556 | 0986B01556 | AB3535(P) | 0986B03535 | | | | |
| MERCEDES BENZ | | | | OB1012 | 0986B01012 | AB3904(S) | 0986B03904 | | | | |
| MERCEDES BENZ | 1418 - 1418K - 1418 E - LA 1418 - LAK 1418 | OM366A | | OB1556 | 0986B01556 | AB3535(P) | 0986B03535 | DB0200 | 0986BF0200 | | |
| MERCEDES BENZ | | | | | | AB3904(S) | 0986B03904 | DB0704 | 0986450704 | | |
| MERCEDES BENZ | L - LA - LAK - K 1418 | OM366A/LA | 96 => | OB1012 | 0986B01012 | AB3537(P) | 0986B03537 | DB0709(BoxSA) | 0986450709 | | |
| MERCEDES BENZ | L - LA - LAK - K 1418 | OM366A/LA | | HB1652(DH) | 0986B01652 | | | DB0220(Elem.SA) | 0986BF0220 | | |

| MARCA | VEHÍCULO | MOTOR | FECHA | SC | ACEITE | SC | AIRE | SC | COMBUSTIBLE | SC | HABITÁCULO |
|---|---|---|---|---|---|---|---|---|---|---|---|
| MERCEDES BENZ | L - LK 1418 R | OM366A | 98 => | OB1555 | 0986B01555 | AB3535(P) | 0986B03535 | DB0707(BoxSA) | 0986450707 | | |
| MERCEDES BENZ | | | | OB1012 | 0986B01012 | AB3904(S) | 0986B03904 | DB0217(Elem.SA) | 0986BF0217 | | |
| MERCEDES BENZ | L - LK 1418 R | OM366A | | HB1652(DH) | 0986B01652 | | | | | | |
| MERCEDES BENZ | LA 1419 | OM366A | | OB1556 | 0986B01556 | AB3511(P) | 0986B03511 | DB0200 | 0986BF0200 | | |
| MERCEDES BENZ | LA 1419 | OM366A | | HB1652(DH) | 0986B01652 | AB3903(S) | 0986B03903 | DB0704 | 0986450704 | | |
| MERCEDES BENZ | L 1420 | OM366/LA | | OB1012 | 0986B01012 | AB03515 | 0986B03515 | | | | |
| MERCEDES BENZ | L 1420 | OM366/LA | | HB1652(DH) | 0986B01652 | | | | | | |
| MERCEDES BENZ | | | | | | Z8250(Secador) | 0986628250 | | | | |
| MERCEDES BENZ | L 1514 | OM352 | | OB1565 | 0986B01565 | AB3535(P) | 0986B03535 | DB0200 | 0986BF0200 | | |
| MERCEDES BENZ | L 1514 | OM352 | | HB1652(DH) | 0986B01652 | AB3904(S) | 0986B03904 | | | | |
| MERCEDES BENZ | L 1517 | OM352A | | OB1565 | 0986B01565 | AB3535(P) | 0986B03535 | DB0200 | 0986BF0200 | | |
| MERCEDES BENZ | L 1517 | OM352A | | HB1652(DH) | 0986B01652 | AB3904(S) | 0986B03904 | DB0704 | 0986450704 | | |
| MERCEDES BENZ | L - LS 1518 | OM352A | | OB1565 | 0986B01565 | AB3535 | 0986B03535 | DB0200 | 0986BF0200 | | |
| MERCEDES BENZ | L - LS 1518 | OM352A | | HB1652(DH) | 0986B01652 | | | DB0704 | 0986450704 | | |
| MERCEDES BENZ | L 1521 | OM355-5 | | OB1554 | 0986B01554 | AB3535(P) | 0986B03535 | DB0696 | 0986450696 | | |
| MERCEDES BENZ | L 1521 | OM355-5 | | HB1652(DH) | 0986B01652 | AB3904(S) | 0986B03904 | | | | |
| MERCEDES BENZ | L - LS 1526 | OM355-5A | | OB1554 | 0986B01554 | AB3513 | 0986B03513 | N9354 | 1457429354 | | |
| MERCEDES BENZ | L - LS 1526 | OM355-5A | | HB1652(DH) | 0986B01652 | | | | | | |
| MERCEDES BENZ | L 1614 | OM366 | | OB1012 | 0986B01012 | AB3535(P) | 0986B03535 | DB0200 | 0986BF0200 | | |
| MERCEDES BENZ | | | | HB1652(DH) | 0986B01652 | AB3904(S) | 0986B03904 | DB0704 | 0986450704 | | |
| MERCEDES BENZ | L - LK 1615 | OM366 | | OB1556o | 0986B01556 | AB3511(P) | 0986B03511 | DB0200 | 0986BF0200 | | |
| MERCEDES BENZ | | | | OB1012 | 0986B01012 | AB3903(S) | 0986B03903 | DB0704 | 0986450704 | | |
| MERCEDES BENZ | 1618 M | OM904LA | 98 => | OB1557 | 0986B01557 | AB2289(P) | 1457432289 | DB0201(S) | 0986BF0201 | | |
| MERCEDES BENZ | | | | HB1652(DH) | 0986B01652 | AB3405(S) | 0986B03405 | DB0727(BoxSA) | 0986450727 | | |
| MERCEDES BENZ | | | | | | Z8250(Secador) | 0986628250 | DB0214(Elem.SA) | 0986BF0214 | | |
| MERCEDES BENZ | L/LK 1618 | OM366A | | OB1556o | 0986B01556 | AB3535(P) | 0986B03535 | DB0200 | 0986BF0200 | | |
| MERCEDES BENZ | | | | OB1012 | 0986B01012 | AB3904(S) | 0986B03904 | DB0704 | 0986450704 | | |
| MERCEDES BENZ | L 1619 | OM366A | | OB1556o | 0986B01556 | AB3535(P) | 0986B03535 | DB0200 | 0986BF0200 | | |
| MERCEDES BENZ | | | | OB1012 | 0986B01012 | AB3904(S) | 0986B03904 | DB0704 | 0986450704 | | |
| MERCEDES BENZ | L - LK 1620 | OM366LA | 96 => | OB1556 | 0986B01556 | AB3515(P) | 0986B03515 | N4180 | 1457434180 | | |
| MERCEDES BENZ | L - LK 1620 | | | HB1652(DH) | 0986B01652 | | | | | | |
| MERCEDES BENZ | L - LK 1620 Turbocooler | OM366LA | 11-97 => | OB1012 | 0986B01012 | AB3537(P) | 0986B03537 | N4180 | 1457434180 | | |
| MERCEDES BENZ | L - LK 1620 Turbocooler | | | HB1652(DH) | 0986B01652 | Z8250(Secador) | 0986628250 | DB0709(BoxSA) | 0986450709 | | |
| MERCEDES BENZ | | | | | | | | DB0220(Elem.SA) | 0986BF0220 | | |
| MERCEDES BENZ | L/LK 1621 | OM366LA | | OB1556 | 0986B01556 | AB3515(P) | 0986B03515 | DB0718 | 0986450718 | | |
| MERCEDES BENZ | L/LK 1621 | | | HB1652(DH) | 0986B01652 | | | N4180 | 1457434180 | | |
| MERCEDES BENZ | 1622 L | OM924LA | 01 => | OB1557 | 0986B01557 | AB2288(P) | 1457432288 | DB0201(S) | 0986BF0201 | | |
| MERCEDES BENZ | 1622 L | | | HB1652(DH) | 0986B01652 | | | DB0727(BoxSA) | 0986450727 | | |
| MERCEDES BENZ | | | | | | | | DB0214(Elem.SA) | 0986BF0214 | | |

| MARCA | VEHÍCULO | MOTOR | FECHA | SC | ACEITE | SC | AIRE | SC | COMBUSTIBLE | SC | HABITÁCULO |
|---|---|---|---|---|---|---|---|---|---|---|---|
| MERCEDES BENZ | L - LS 1622 | OM366LA | | OB1556o | 0986B01556 | AB3535(P) | 0986B03535 | DB0200 | 0986BF0200 | | |
| MERCEDES BENZ | | | | OB1012 | 0986B01012 | AB3904(S) | 0986B03904 | DB0704 | 0986450704 | | |
| MERCEDES BENZ | L 1623 Electronic | OM906LA | 98 => | OB1569 | 0986B01569 | AB2288(P) | 1457432288 | DB0201(S) | 0986BF0201 | | |
| MERCEDES BENZ | L 1623 Electronic | OM906LA | | HB1652(DH) | 0986B01652 | | | DB0727(BoxSA) | 0986450727 | | |
| MERCEDES BENZ | | | | | | | | DB0214(Elem.SA) | 0986BF0214 | | |
| MERCEDES BENZ | L - LS 1623 | OM366LA | | OB1012 | 0986B01012 | AB3537(P) | 0986B03537 | DB0220(Elem.SA) | 0986BF0220 | | |
| MERCEDES BENZ | L 1624 | OM906LA | 01.07 = > | OB1569 | 0986B01569 | AB2288 | 1457432288 | DB0201 | 0986BF0201 | | |
| MERCEDES BENZ | | | | | | | | DB0727(BoxSA) | 0986450727 | | |
| MERCEDES BENZ | | | | | | | | DB0214(Elem.SA) | 0986BF0214 | | |
| MERCEDES BENZ | LS 1625 - LS 1630 | OM449LA | | | | AB3515(P) | 0986B03515 | N9354 | 1457429354 | | |
| MERCEDES BENZ | LS 1625 - LS 1630 | OM449LA | | HB1652(DH) | 0986B01652 | | | N9354 | 1457429354 | | |
| MERCEDES BENZ | L/ LS 1632 | OM449LA | 99 => | OB1562 | 0986B01562 | AB3515(P) | 0986B03515 | N9354 | 1457429354 | | |
| MERCEDES BENZ | L/ LS 1632 | | | HB1652(DH) | 0986B01652 | | | DB0708(BoxSA) | 0986450708 | | |
| MERCEDES BENZ | 1633 - L/LS 1633 | OM449LA | | OB1562 | 0986B01562 | AB3515(P) | 0986B03515 | DB0696 | 0986450696 | | |
| MERCEDES BENZ | 1633 - L/LS 1633 | | | HB1652(DH) | 0986B01652 | | | N9354 | 1457429354 | | |
| MERCEDES BENZ | 1634 LS | OM447LAII | 01.00 => | OB1561 | 0986B01561 | AB3010 | 0986B03010 | N9655 | 1457429655 | | |
| MERCEDES BENZ | 1634 LS | | | HB1652(DH) | 0986B01652 | | | DB0213(Elem.SA) | 0986BF0213 | | |
| MERCEDES BENZ | 1634 L | OM447LAII | 01.08 => | OB1561 | 0986B01561 | AB3010 | 0986B03010 | N9354 | 1457429354 | | |
| MERCEDES BENZ | 1634 L | | | HB1652(DH) | 0986B01652 | | | DB0350 | 0986BF0350 | | |
| MERCEDES BENZ | | | | | | | | DB078(BoxSA) | 0986450708 | | |
| MERCEDES BENZ | 1634 LS E | OM457LA(EuroIII) | 01.06 => | OB1561 | 0986B01561 | AB3010 | 0986B03010 | N9655 | 1457429655 | | |
| MERCEDES BENZ | | | | HB1652(DH) | 0986B01652 | | | DB0223(Elem.SA) | 0986BF0223 | | |
| MERCEDES BENZ | | | | | | | | DB0727(BoxSA) | 0986450727 | | |
| MERCEDES BENZ | 1644 Turbocooler | OM447LA | 93 => | OB1561 | 0986B01561 | | | DB0703 | 0986450703 | | |
| MERCEDES BENZ | | | | OB1556 | 0986B01556 | Z8250(Secador) | 0986628250 | DB0696 | 0986450696 | | |
| MERCEDES BENZ | | | | HB1652(DH) | 0986B01652 | | | | | | |
| MERCEDES BENZ | 1714 K | OM366 | | OB1556 | 0986B01556 | AB3535(P) | 0986B03535 | DB0200 | 0986BF0200 | | |
| MERCEDES BENZ | | | | HB1652(DH) | 0986B01652 | AB3904(S) | 0986B03904 | DB0709(BoxSA) | 0986450709 | | |
| MERCEDES BENZ | | | | | | | | DB0220(Elem.SA) | 0986BF0220 | | |
| MERCEDES BENZ | | | | | | | | DB0707(BoxSA) | 0986450707 | | |
| MERCEDES BENZ | 1715 | OM366 | | OB1012 | 0986B01012 | AB3511(P) | 0986B03511 | DB0200 | 0986BF0200 | | |
| MERCEDES BENZ | | | | | | AB3903(S) | 0986B03903 | DB0704 | 0986450704 | | |
| MERCEDES BENZ | 1718 M | OM904LA | 04 => | OB1557 | 0986B01557 | AB2289(P) | 1457432289 | DB0201(S) | 0986BF0201 | | |
| MERCEDES BENZ | 1718 M | OM904LA | | HB1652(DH) | 0986B01652 | AB3405(S) | 0986B03405 | | | | |
| MERCEDES BENZ | | | | | | AB3537(P) | 0986B03537 | | | | |
| MERCEDES BENZ | | | | | | Z8250(Secador) | 0986628250 | | | | |
| MERCEDES BENZ | 1718 - 1718 A - 1718 K | OM366A | | OB1556 | 0986B01556 | AB3535(P) | 0986B03535 | DB0200 | 0986BF0200 | | |
| MERCEDES BENZ | | | | OB1012 | 0986B01012 | AB3904(S) | 0986B03904 | DB0704 | 0986450704 | | |
| MERCEDES BENZ | | | | HB1652(DH) | 0986B01652 | | | DB0707(BoxSA) | 0986450707 | | |

| MARCA | VEHÍCULO | MOTOR | FECHA | SC | ACEITE | SC | AIRE | SC | COMBUSTIBLE | SC | HABITÁCULO |
|---|---|---|---|---|---|---|---|---|---|---|---|
| MERCEDES BENZ | | | | | | | | DB0217(Elem.SA) | 0986BF0217 | | |
| MERCEDES BENZ | A 1718 | OM366A | | OB1556 | 0986B01556 | AB3535(P) | 0986B03535 | DB0709(BoxSA) | 0986450709 | | |
| MERCEDES BENZ | | | | HB1652(DH) | 0986B01652 | AB3904(S) | 0986B03904 | DB0220(Elem.SA) | 0986BF0220 | | |
| MERCEDES BENZ | K 1718 | OM366A | 96 => | OB1012 | 0986B01012 | AB3537(P) | 0986B03537 | DB0709(BoxSA) | 0986450709 | | |
| MERCEDES BENZ | | | | HB1652(DH) | 0986B01652 | Z8250(Secador) | 0986628250 | DB0707(BoxSA) | 0986450707 | | |
| MERCEDES BENZ | | | | | | | | DB0217(Elem.SA) | 0986BF0217 | | |
| MERCEDES BENZ | L 1718 | OM366A | | OB1556 | 0986B01556 | AB3535(P) | 0986B03535 | DB0702 | 0986450702 | | |
| MERCEDES BENZ | L 1718 | | | HB1652(DH) | 0986B01652 | AB3904(S) | 0986B03904 | DB0709(BoxSA) | 0986450709 | | |
| MERCEDES BENZ | | | | | | Z8250(Secador) | 0986628250 | DB0220(Elem.SA) | 0986BF0220 | | |
| MERCEDES BENZ | 1720 - 1720 K | OM366LA | 11-97 => | OB1012 | 0986B01012 | AB3537(P) | 0986B03537 | | | | |
| MERCEDES BENZ | 1720 - 1720 K | OM366LA | | HB1652(DH) | 0986B01652 | Z8250(Secador) | 0986628250 | DB0709(BoxSA) | 0986450709 | | |
| MERCEDES BENZ | | | | | | | | N4180 | 1457434180 | | |
| MERCEDES BENZ | 1721 - 1721 S | OM366LA | | OB1556 | 0986B01556 | AB3515(P) | 0986B03515 | DB0718 | 0986450718 | | |
| MERCEDES BENZ | 1721 - 1721 S | | | HB1652(DH) | 0986B01652 | | | DB0217(Elem.SA) | 0986BF0217 | | |
| MERCEDES BENZ | S 1721 | OM366LA | 96 => | OB1012 | 0986B01012 | AB3537(P) | 0986B03537 | DB0709(BoxSA) | 0986450709 | | |
| MERCEDES BENZ | S 1721 | OM366LA | | HB1652(DH) | 0986B01652 | Z8250(Secador) | 0986628250 | DB0217(Elem.SA) | 0986BF0217 | | |
| MERCEDES BENZ | 1722 | OM366LA | | OB1012 | 0986B01012 | AB3535(P) | 0986B03535 | DB0200 | 0986BF0200 | | |
| MERCEDES BENZ | | | | | | AB3904(S) | 0986B03904 | DB0704 | 0986450704 | | |
| MERCEDES BENZ | 1723 Turbocooler | OM366LA | 11-97 => | OB1012 | 0986B01012 | AB3537(P) | 0986B03537 | | | | |
| MERCEDES BENZ | 1723 Turbocooler | OM366LA | | HB1652(DH) | 0986B01652 | Z8250(Secador) | 0986628250 | DB0709(BoxSA) | 0986450709 | | |
| MERCEDES BENZ | | | | | | | | N4180 | 1457434180 | | |
| MERCEDES BENZ | 1723 S | OM906LA | | OB1569 | 0986B01569 | AB2288(P) | 1457432288 | DB0201(S) | 0986BF0201 | | |
| MERCEDES BENZ | 1723 S | | | HB1652(DH) | 0986B01652 | | | | | | |
| MERCEDES BENZ | L 1723 Electronic | OM906LA | 98 => | OB1569 | 0986B01569 | AB2288(P) | 1457432288 | DB0201(S) | 0986BF0201 | | |
| MERCEDES BENZ | L 1723 Electronic | OM906LA | | HB1652(DH) | 0986B01652 | | | DB0727(BoxSA) | 0986450727 | | |
| MERCEDES BENZ | | | | | | | | DB0214(Elem.SA) | 0986BF0214 | | |
| MERCEDES BENZ | 1728 Electronic | OM906LA | 04 => | OB1569 | 0986B01569 | AB3537(P) | 0986B03537 | DB0201(S) | 0986BF0201 | | |
| MERCEDES BENZ | 1728 Electronic | OM906LA | | HB1652(DH) | 0986B01652 | Z8250(Secador) | 0986628250 | | | | |
| MERCEDES BENZ | 1840 - 1844 | OM402/442LA | | OB1561 | 0986B01561 | | | DB0703 | 0986450703 | | |
| MERCEDES BENZ | | | | OB1556 | 0986B01556 | | | DB0696 | 0986450696 | | |
| MERCEDES BENZ | 1840 - 1844 | | | HB1652(DH) | 0986B01652 | | | | | | |
| MERCEDES BENZ | 1620 - 1920 | OM366LA | | OB1556 | 0986B01556 | AB3535(P) | 0986B03535 | DB0200 | 0986BF0200 | | |
| MERCEDES BENZ | 1620 - 1920 | | | HB1652(DH) | 0986B01652 | AB3904(S) | 0986B03904 | DB0702 | 0986450702 | | |
| MERCEDES BENZ | 1844 SK 655 | OM440(442)LA | 01.92 => 09.96 | OB1561 / OB1556 | 0986B01561/0986B01556 | | | N9354 | 1457429354 | | |
| MERCEDES BENZ | L - LS 1935/1938/1941 | OM447LA | | OB1561 | 0986B01561 | AB3536(P) | 0986B03536 | DB0696 | 0986450696 | | |
| MERCEDES BENZ | L - LS 1935/1938/1941 | | | HB1652(DH) | 0986B01652 | | | DB0708(BoxSA) | 0986450708 | | |
| MERCEDES BENZ | L - LS 1938 Electronic | OM457LA | 98 => | OB1012 | 0986B01012 | AB3536(P) | 0986B03536 | N9655 | 1457429655 | | |
| MERCEDES BENZ | L - LS 1938 Electronic | OM457LA | | HB1652(DH) | 0986B01652 | | | DB0223(Elem.SA) | 0986BF0223 | | |
| MERCEDES BENZ | | | | | | Z8250(Secador) | 0986628250 | | | | |

| MARCA | VEHÍCULO | MOTOR | FECHA | SC | ACEITE | SC | AIRE | SC | COMBUSTIBLE | SC | HABITÁCULO |
|---|---|---|---|---|---|---|---|---|---|---|---|
| MERCEDES BENZ | 1938 S Electronic | OM447LA | 99 => | P9128 | 1457429128 | AB3010 | 0986B03010 | N9655 | 1457429655 | | |
| MERCEDES BENZ | 1938 S Electronic | OM447LA | | HB1652(DH) | 0986B01652 | | | DB0727(BoxSA) | 0986450727 | | |
| MERCEDES BENZ | | | | | | | | DB0214(Elem.SA) | 0986BF0214 | | |
| MERCEDES BENZ | 1940 - 1944 | OM442LA | | OB1561 | 0986B01561 | | | DB0703 | 0986450703 | | |
| MERCEDES BENZ | | | | OB1556 | 0986B01556 | | | DB0696 | 0986450696 | | |
| MERCEDES BENZ | 1940 - 1944 | OM442LA | | HB1652(DH) | 0986B01652 | | | | | | |
| MERCEDES BENZ | 1944 | OM457LA | 01 => | P9128 | 1457429128 | AB3010 | 0986B03010 | N9655 | 1457429655 | | |
| MERCEDES BENZ | 1944 | OM457LA | | HB1652(DH) | 0986B01652 | Z8250(Secador) | 0986628250 | DB0727(BoxSA) | 0986450727 | | |
| MERCEDES BENZ | | | | | | | | DB0214(Elem.SA) | 0986BF0214 | | |
| MERCEDES BENZ | | | | | | | | DB0223(Elem.SA) | 0986BF0223 | | |
| MERCEDES BENZ | 2044 - 2244 | OM442LA | | OB1561 | 0986B01561 | | | DB0703 | 0986450703 | | |
| MERCEDES BENZ | | | | OB1556 | 0986B01556 | | | DB0696 | 0986450696 | | |
| MERCEDES BENZ | 2044 - 2244 | OM442LA | | HB1652(DH) | 0986B01652 | | | | | | |
| MERCEDES BENZ | L - LB 2318 | OM366A | 96 => | OB1012 | 0986B01012 | AB3537(P) | 0986B03537 | DB0709(BoxSA) | 0986450709 | | |
| MERCEDES BENZ | L - LB 2318 | | | HB1652(DH) | 0986B01652 | Z8250(Secador) | 0986628250 | DB0707(BoxSA) | 0986450707 | | |
| MERCEDES BENZ | L - LB - LK 2318 | | | OB1556 | 0986B01556 | AB3535(P) | 0986B03535 | DB0200 | 0986BF0200 | | |
| MERCEDES BENZ | | | | OB1012 | 0986B01012 | AB3904(S) | 0986B03904 | DB0704 | 0986450704 | | |
| MERCEDES BENZ | L - LB - LK 2318 | | | HB1652(DH) | 0986B01652 | Z8250(Secador) | 0986628250 | | | | |
| MERCEDES BENZ | L - LB - LK 2325 | OM449A | | OB1562 | 0986B01562 | AB3515(P) | 0986B03515 | DB0696 | 0986450696 | | |
| MERCEDES BENZ | | | | | | | | DB0703 | 0986450703 | | |
| MERCEDES BENZ | L 2418 | OM366A/LA | 96 => | OB1012 | 0986B01012 | AB3537(P) | 0986B03537 | DB0709(BoxSA) | 0986450709 | | |
| MERCEDES BENZ | L 2418 | OM366A/LA | | HB1652(DH) | 0986B01652 | Z8250(Secador) | 0986628250 | DB0217(Elem.SA) | 0986BF0217 | | |
| MERCEDES BENZ | 2418 | | | OB1556 | 0986B01556 | AB3535(P) | 0986B03535 | DB0200 | 0986BF0200 | | |
| MERCEDES BENZ | 2418 | | | OB1012 | 0986B01012 | AB3904(S) | 0986B03904 | DB0704 | 0986450704 | | |
| MERCEDES BENZ | | | | HB1652(DH) | 0986B01652 | Z8250(Secador) | 0986628250 | | | | |
| MERCEDES BENZ | 2423 B - K | OM906LA | 98 => | OB1569 | 0986B01569 | | | DB0201(S) | 0986BF0201 | | |
| MERCEDES BENZ | 2423 B - K | OM906LA | | HB1652(DH) | 0986B01652 | Z8250(Secador) | 0986628250 | DB0727(BoxSA) | 0986450727 | | |
| MERCEDES BENZ | | | | | | | | DB0214(Elem.SA) | 0986BF0214 | | |
| MERCEDES BENZ | 2044 SK 656 | OM440(442)LA | 01.92 => 09.96 | OB1561/OB1556 | 0986B01561/0986B01556 | | | N9354 | 1457429354 | | |
| MERCEDES BENZ | 2540 | OM402/442LA | | | | AB3536(P) | 0986B03536 | N9354 | 1457429354 | | |
| MERCEDES BENZ | 2540 | OM402/442LA | | HB1652(DH) | 0986B01652 | Z8250(Secador) | 0986628250 | | | | |
| MERCEDES BENZ | 2540 - 2544 - 2644 | OM442LA | | OB1561 | 0986B01561 | | | DB0703 | 0986450703 | | |
| MERCEDES BENZ | | | | OB1556 | 0986B01556 | | | DB0696 | 0986450696 | | |
| MERCEDES BENZ | 2540 - 2544 - 2644 | | | HB1652(DH) | 0986B01652 | | | | | | |
| MERCEDES BENZ | 2544 SK 658 | OM440(442)LA | 01.92 => 09.96 | OB1561/OB1556 | 0986B01561/0986B01556 | | | N9354 | 1457429354 | | |
| MERCEDES BENZ | L - LK - LS 2635 | OM447LA | | OB1561 | 0986B01561 | AB3536(P) | 0986B03536 | DB0696 | 0986450696 | | |
| MERCEDES BENZ | | | | HB1652(DH) | 0986B01652 | | | DB0703 | 0986450703 | | |
| MERCEDES BENZ | L - LS 2638 | OM457LA | 98 => | OB1561 | 0986B01561 | AB3536(P) | 0986B03536 | DB0727(BoxSA) | 0986450727 | | |
| MERCEDES BENZ | L - LS 2638 | OM457LA | | HB1652(DH) | 0986B01652 | | | DB0214(Elem.SA) | 0986BF0214 | | |

| MARCA | VEHÍCULO | MOTOR | FECHA | SC | ACEITE | SC | AIRE | SC | COMBUSTIBLE | SC | HABITÁCULO |
|---|---|---|---|---|---|---|---|---|---|---|---|
| MERCEDES BENZ | | | | | | Z8250(Secador) | 0986628250 | | | | |
| MERCEDES BENZ | L-LS- LK 2638 | OM447 | =>12.97 | | | AB3010 | 0986B03010 | N9655 | 1457429655 | | |
| MERCEDES BENZ | L-LS- LK 2638 | OM447 | | HB1652(DH) | 0986B01652 | Z8250(Secador) | 0986628250 | DB0214(Elem.SA) | 0986BF0214 | | |
| MERCEDES BENZ | | | | | | | | DB0727(BoxSA) | 0986450727 | | |
| MERCEDES BENZ | 3244 - 3544 | OM442LA | | OB1561 | 0986B01561 | | | DB0703 | 0986450703 | | |
| MERCEDES BENZ | | | | OB1556 | 0986B01556 | | | DB0696 | 0986450696 | | |
| MERCEDES BENZ | 3244 - 3544 | OM442LA | | HB1652(DH) | 0986B01652 | | | | | | |
| MERCEDES BENZ | O 170 | OM352A | | OB1565 | 0986B01565 | AB3535 | 0986B03535 | DB0200 | 0986BF0200 | | |
| MERCEDES BENZ | O 374 | OM447 | | OB1561 | 0986B01561 | AB3536(P) | 0986B03536 | DB0696 | 0986450696 | | |
| MERCEDES BENZ | O 374 | OM447 | | HB1652(DH) | 0986B01652 | | | DB0703 | 0986450703 | | |
| MERCEDES BENZ | O 400 RSD/SER | OM457LAElectronico | | | | Z8250(Secador) | 0986628250 | | | | |
| MERCEDES BENZ | O 500 | OM926LAElectronico | 00=> | OB1569 | 0986B01569 | AB3537(P) | 0986B03537 | DB0201(S) | 0986BF0201 | | |
| MERCEDES BENZ | O 500 | OM926LAElectronico | | HB1652(DH) | 0986B01652 | | | | | | |
| MERCEDES BENZ | | | | | | Z8250(Secador) | 0986628250 | DB0214(Elem.SA) | 0986BF0214 | | |
| MERCEDES BENZ | O 500 M | OM906LAElectronico | 98=> | OB1569 | 0986B01569 | AB3537(P) | 0986B03537 | DB0201(S) | 0986BF0201 | | |
| MERCEDES BENZ | | | | HB1652(DH) | 0986B01652 | AB3003 | 0986B03003 | DB0214(Elem.SA) | 0986BF0214 | | |
| MERCEDES BENZ | | | | | | Z8250(Secador) | 0986628250 | | | | |
| MERCEDES BENZ | O 500 M | OM906LA | 01.06=> | OB1569 | 0986B01569 | AB3003 | 0986B03003 | DB0201(S) | 0986BF0201 | | |
| MERCEDES BENZ | | | | | | AB3406(S) | 0986B03406 | DB0727(BoxSA) | 0986450727 | | |
| MERCEDES BENZ | | | | | | | | DB0213(Elem.SA) | 0986BF0213 | | |
| MERCEDES BENZ | O 500 R | OM906LA | 98=> | OB1569 | 0986B01569 | AB3537(P) | 0986B03537 | DB0201(S) | 0986BF0201 | | |
| MERCEDES BENZ | | | | HB1652(DH) | 0986B01652 | Z8250(Secador) | 0986628250 | DB0214(Elem.SA) | 0986BF0214 | | |
| MERCEDES BENZ | O 500 RS/RSD | OM457LA | 01.06 => | OB1561 | 0986B01561 | AB310 | 0986B03010 | N9655 | 1457429655 | | |
| MERCEDES BENZ | | | | | | Z8250(Secador) | 0986628250 | DB0213(Elem.SA) | 0986BF0213 | | |
| MERCEDES BENZ | OF 1114 | OM352 | | | | AB3535 | 0986B03535 | DB0200 | 0986BF0200 | | |
| MERCEDES BENZ | OF 1115 L - SB | OM904LA | 00 => | OB1557 | 0986B01557 | AB2289(P) | 1457432289 | DB0201(S) | 0986BF0201 | | |
| MERCEDES BENZ | | | | | | AB3405(S) | 0986B03405 | DB0727(BoxSA) | 0986450727 | | |
| MERCEDES BENZ | | | | | | | | DB0214(Elem.SA) | 0986BF0214 | | |
| MERCEDES BENZ | OF 1214 | OM352 | | OB1565 | 0986B01565 | AB3535(P) | 0986B03535 | DB0200 | 0986BF0200 | | |
| MERCEDES BENZ | | | | | | AB3904(S) | 0986B03904 | | | | |
| MERCEDES BENZ | OF 1215 | OM366 | | OB1556 | 0986B01556 | AB3535(P) | 0986B03535 | DB0200 | 0986BF0200 | | |
| MERCEDES BENZ | | | | | | AB3904(S) | 0986B03904 | DB0704 | 0986450704 | | |
| MERCEDES BENZ | OF 1417 Electronic | OM904LA | 98 => | OB1557 | 0986B01557 | AB2289(P) | 1457432289 | DB0201(S) | 0986BF0201 | | |
| MERCEDES BENZ | OF 1417 Electronic | OM904LA | | | | AB3405(S) | 0986B03405 | DB0214(Elem.SA) | 0986BF0214 | | |
| MERCEDES BENZ | | | | | | Z8250(Secador) | 0986628250 | | | | |
| MERCEDES BENZ | OF 1418 Electronic | OM904LAElectronico | 98 => | OB1557 | 0986B01557 | AB2289(P) | 1457432289 | DB0201(S) | 0986BF0201 | | |
| MERCEDES BENZ | | | | | | AB3405(S) | 0986B03405 | DB0214(Elem.SA) | 0986BF0214 | | |
| MERCEDES BENZ | | | | | | Z8250(Secador) | 0986628250 | | | | |
| MERCEDES BENZ | OF 1721 Mecánico | OM366LA | 98 => | OB1012 | 0986B01012 | AB2288(P) | 1457432288 | DB0709(BoxSA) | 0986450709 | | |

| MARCA | VEHÍCULO | MOTOR | FECHA | SC | ACEITE | SC | AIRE | SC | COMBUSTIBLE | SC | HABITÁCULO |
|---|---|---|---|---|---|---|---|---|---|---|---|
| MERCEDES BENZ | | | | | | | | | | | |
| MERCEDES BENZ | OF 1721 Mecánico | OM366LA | | | | Z8250(Secador) | 0986628250 | | | | |
| MERCEDES BENZ | OF 1721 Electronic | OM906LA | 98 => | OB1569 | 0986B01569 | AB2288(P) | 1457432288 | DB0201(S) | 0986BF0201 | | |
| MERCEDES BENZ | OF 1721 Electronic | OM906LA | | HB1652(DH) | 0986B01652 | | | DB0727(BoxSA) | 0986450727 | | |
| MERCEDES BENZ | | | | | | Z8250(Secador) | 0986628250 | DB0214(Elem.SA) | 0986BF0214 | | |
| MERCEDES BENZ | OF 1722/1722M | OM924LAElectronico | 98 => | OB1557 | 0986B01557 | AB3535 | 0986B03535 | DB0201 | 0986BF0201 | | |
| MERCEDES BENZ | | | | | | AB3904(S) | 0986B03904 | | | | |
| MERCEDES BENZ | | | | | | Z8250(Secador) | 0986628250 | | | | |
| MERCEDES BENZ | OF 1620 | OM366LA | 96 => | OB1012 | 0986B01012 | AB3535(P) | 0986B03535 | DB0200 | 0986BF0200 | | |
| MERCEDES BENZ | OF 1620 | | | HB1652(DH) | 0986B01652 | AB3904(S) | 0986B03904 | DB0704 | 0986450704 | | |
| MERCEDES BENZ | | | | | | Z8250(Secador) | 0986628250 | | | | |
| MERCEDES BENZ | OH 1314 | OM352 | | OB1565 | 0986B01565 | AB3535(P) | 0986B03535 | DB0200 | 0986BF0200 | | |
| MERCEDES BENZ | OH 1314 | OM352 | | HB1652(DH) | 0986B01652 | AB3904(S) | 0986B03904 | DB0704 | 0986450704 | | |
| MERCEDES BENZ | OF/ OH 1315/1316 | OM366 | | OB1556 | 0986B01556 | AB3535(P) | 0986B03535 | DB0200 | 0986BF0200 | | |
| MERCEDES BENZ | | | | OB1012 | 0986B01012 | AB3904(S) | 0986B03904 | DB0704 | 0986450704 | | |
| MERCEDES BENZ | OF/ OH 1315/1316 | OM366 | | HB1652(DH) | 0986B01652 | | | | | | |
| MERCEDES BENZ | OH 1318 - 1418 | OM352A | | OB1565 | 0986B01565 | AB3535(P) | 0986B03535 | DB0200 | 0986BF0200 | | |
| MERCEDES BENZ | OH 1318 - 1418 | OM352A | | HB1652(DH) | 0986B01652 | AB3904(S) | 0986B03904 | DB0704 | 0986450704 | | |
| MERCEDES BENZ | OH 1318 | OM366A | 97 => | OB1556 | 0986B01556 | AB3535(P) | 0986B03535 | DB0200 | 0986BF0200 | | |
| MERCEDES BENZ | OH 1318 | | | HB1652(DH) | 0986B01652 | AB3904(S) | 0986B03904 | DB0704 | 0986450704 | | |
| MERCEDES BENZ | OH 1320/1420 | OM366A | | OB1556 | 0986B01556 | AB3535(P) | 0986B03535 | DB0200 | 0986BF0200 | | |
| MERCEDES BENZ | | | | OB1012 | 0986B01012 | AB3904(S) | 0986B03904 | DB0704 | 0986450704 | | |
| MERCEDES BENZ | OH 1320/1420 | OM366A | | HB1652(DH) | 0986B01652 | | | | | | |
| MERCEDES BENZ | OH 1417 | OM904LAElectronico | 98 => | OB1557 | 0986B01557 | AB2289(P) | 1457432289 | DB0201(S) | 0986BF0201 | | |
| MERCEDES BENZ | | | | | | AB3405(S) | 0986B03405 | DB0214(Elem.SA) | 0986BF0214 | | |
| MERCEDES BENZ | | | | | | Z8250(Secador) | 0986628250 | | | | |
| MERCEDES BENZ | OH 1418 | OM904LAElectronico | 98 => | OB1557 | 0986B01557 | AB2289(P) | 1457432289 | DB0201(S) | 0986BF0201 | | |
| MERCEDES BENZ | | | | | | AB3405(S) | 0986B03405 | DB0214(Elem.SA) | 0986BF0214 | | |
| MERCEDES BENZ | | | | | | Z8250(Secador) | 0986628250 | | | | |
| MERCEDES BENZ | OH 1419 - OH 1517 | OM355-5 | | OB1554 | 0986B01554 | AB3513 | 0986B03513 | DB0696 | 0986450696 | | |
| MERCEDES BENZ | OH 1419 - OH 1517 | | | HB1652(DH) | 0986B01652 | | | DB0703 | 0986450703 | | |
| MERCEDES BENZ | OH 1420 | OM366LA | 98 => | OB1012 | 0986B01012 | AB3515(P) | 0986B03515 | N4180 | 1457434180 | | |
| MERCEDES BENZ | | | | HB1652(DH) | 0986B01652 | | | DB0703 | 0986450703 | | |
| MERCEDES BENZ | | | | | | Z8250(Secador) | 0986628250 | | | | |
| MERCEDES BENZ | OH 1421 L | | 98 => | OB1012 | 0986B01012 | AB2288(P) | 1457432288 | DB0709(BoxSA) | 0986450709 | | |
| MERCEDES BENZ | | | | | | | | | | | |
| MERCEDES BENZ | OH 1526 | OM355-5A | | OB1554 | 0986B01554 | AB3513 | 0986B03513 | DB0696 | 0986450696 | | |
| MERCEDES BENZ | OH 1526 | | | HB1652(DH) | 0986B01652 | | | DB0703 | 0986450703 | | |
| MERCEDES BENZ | OHL 1316 | OM366 | | OB1556o | 0986B01556 | AB3535(P) | 0986B03535 | DB0200 | 0986BF0200 | | |

| MARCA | VEHÍCULO | MOTOR | FECHA | SC | ACEITE | SC | AIRE | SC | COMBUSTIBLE | SC | HABITÁCULO |
|---|---|---|---|---|---|---|---|---|---|---|---|
| MERCEDES BENZ | | | | OB1012 | 0986B01012 | AB3904(S) | 0986B03904 | DB0704 | 0986450704 | | |
| MERCEDES BENZ | OHL 1320/1420 | OM366A | | OB1556o | 0986B01556 | AB3535(P) | 0986B03535 | DB0702 | 0986450702 | | |
| MERCEDES BENZ | | | | OB1012 | 0986B01012 | AB3904(S) | 0986B03904 | | | | |
| MERCEDES BENZ | OHL 1521 | OM906LA | | OB1569 | 0986B01569 | AB2288(P) | 1457432288 | DB0201(S) | 0986BF0201 | | |
| MERCEDES BENZ | | | | | | | | | | | |
| MERCEDES BENZ | OHL 1621 LE/ L | OM366LA | 97 => | OB1012 | 0986B01012 | AB3515(P) | 0986B03515 | DB0709(BoxSA) | 0986450709 | | |
| MERCEDES BENZ | OHL 1621 LE/ L | | | HB1652(DH) | 0986B01652 | | | DB0220(Elem.SA) | 0986BF0220 | | |
| MERCEDES BENZ | OH 1618 | OM904LA | 98 => | OB1557 | 0986B01557 | AB2289(P) | 1457432289 | DB0201 | 0986BF0201 | | |
| MERCEDES BENZ | | | =>11.04 | HB1652(DH) | 0986B01652 | AB3405(S) | 0986B03405 | DB0214(Elem.SA) | 0986BF0214 | | |
| MERCEDES BENZ | | | 12.04 => | | | Z8250(Secador) | 0986628250 | DB0213(Elem.SA) | 0986BF0213 | | |
| MERCEDES BENZ | OH 1623 | OM366LAG | 98 => | OB1012 | 0986B01012 | AB3515(P) | 0986B03515 | DB0709(BoxSA) | 0986450709 | | |
| MERCEDES BENZ | | | | | | | | | | | |
| MERCEDES BENZ | | | | | | Z8250(Secador) | 0986628250 | | | | |
| MERCEDES BENZ | OH 1628 L | OM449LA | 98 => | OB1562 | 0986B01562 | AB3536(P) | 0986B03536 | | | | |
| MERCEDES BENZ | | | | | | | | | | | |
| MERCEDES BENZ | | | | | | Z8250(Secador) | 0986628250 | | | | |
| MERCEDES BENZ | | | | | | | | | | | |
| MERCEDES BENZ | OHL 1721 SB | OM906LA | | OB1569 | 0986B01569 | AB2288(P) | 1457432288 | DB0201(S) | 0986BF0201 | | |
| MERCEDES BENZ | | | | | | | | DB0709(BoxSA) | 0986450709 | | |
| MERCEDES BENZ | | | | | | | | DB0214(Elem.SA) | 0986BF0214 | | |
| MERCEDES BENZ | ACCELO 715C | | | | | | | | | | |
| MERCEDES BENZ | ACCELO 915C | OM904LA | 01.02 => | | | AB2289(P) | 1457432289 | DB0213(Elem.SA) | 0986BF0213 | | |
| MERCEDES BENZ | | | | | | AB3405(S) | 0986B03405 | | | | |
| MERCEDES BENZ | ACTROS 2041 | OM541LA | 04.03 => 12.08 | P9128 | 1457429128 | | | N9655 | 1457429655 | | |
| MERCEDES BENZ | | | | HB1652(DH) | 0986B01652 | | | | | | |
| MERCEDES BENZ | ATEGO II 1315 | OM904LA | 01.05 = > | OB1557 | 0986B01557 | S0288 | F026400288 | DB0201 | 0986BF0201 | CB0570 | 0986BF0570 |
| MERCEDES BENZ | ATEGO II 1315 | | | HB1652(DH) | 0986B01652 | AB3011 | 0986B03011 | DB0213(Elem.SA) | 0986BF0213 | | |
| MERCEDES BENZ | ATEGO II 1418 /1518/1718 | OM904LA | 01.05 => | OB1557 | 0986B01557 | S0288 | F026400288 | DB0201 | 0986BF0201 | CB0570 | 0986BF0570 |
| MERCEDES BENZ | ATEGO II 1418 /1518/1718 | | | HB1652(DH) | 0986B01652 | AB3011 | 0986B03011 | DB0213(Elem.SA) | 0986BF0213 | | |
| MERCEDES BENZ | | | | | | Z8250(Secador) | 0986628250 | DB0350 | 0986BF0350 | | |
| MERCEDES BENZ | ATEGO II 1725 | OM906LA(EuroIII) | 01.05 => | OB1569 | 0986B01569 | S0288 | F026400288 | DB0201 | 0986BF0201 | CB0570 | 0986BF0570 |
| MERCEDES BENZ | | | | HB1652(DH) | 0986B01652 | AB3011 | 0986B03011 | DB0213(Elem.SA) | 0986BF0213 | | |
| MERCEDES BENZ | | | | | | Z8250(Secador) | 0986628250 | DB0350(Elem.SA) | 0986BF0350 | | |
| MERCEDES BENZ | ATEGO II 1728 | OM926LA | 01.07 => | OB1557 | 0986B01557 | | | DB0201 | 0986BF0201 | CB0570 | 0986BF0570 |
| MERCEDES BENZ | | | | | | | | DB0350 | 0986BF0350 | | |
| MERCEDES BENZ | ATEGO II 2425 | OM906LA | 01.05 => | OB1569 | 0986B01569 | | | DB0201 | 0986BF0201 | CB0570 | 0986BF0570 |
| MERCEDES BENZ | | | | | | | | DB0350 | 0986BF0350 | | |
| MERCEDES BENZ | ATEGO II 2428 | OM926LA | 01.07 => | OB1557 | 0986B01557 | | | DB0201 | 0986BF0201 | CB0570 | 0986BF0570 |
| MERCEDES BENZ | | | | | | | | DB0350 | 0986BF0350 | | |

| MARCA | VEHÍCULO | MOTOR | FECHA | SC | ACEITE | SC | AIRE | SC | COMBUSTIBLE | SC | HABITÁCULO |
|---|---|---|---|---|---|---|---|---|---|---|---|
| MERCEDES BENZ | AXOR II 1933 / 2831 | OM926LA | 05.07 => | OB1569 | 0986B01569 | S0288 | F026400288 | DB0201 | 0986BF0201 | | |
| MERCEDES BENZ | AXOR II 1933 / 2831 | | | HB1652(DH) | 0986B01652 | Z8250(Secador) | 0986628250 | DB0213(Elem.SA) | 0986BF0213 | | |
| MERCEDES BENZ | AXOR II 2035 / 2040 | OM457 | 05.07 => | P7042 | F026407042 | AB3010 | 0986B03010 | N9655 | 1457429655 | | |
| MERCEDES BENZ | AXOR II 2035 / 2040 | | | HB1652(DH) | 0986B01652 | | | DB0213(Elem.SA) | 0986BF0213 | | |
| MERCEDES BENZ | 2428 | OM906LA | 01.04 => | | | AB3537(P) | 0986B03537 | | | | |
| MINI | | | | | | | | | | | |
| MINI | Mini Cooper 1.6 | W10B16A | 05.01 => 09.08 | | | "S3100 /S3306" | 1457433100/1457433306 | | | | |
| MINI | Mini Cooper 1.6 | W11B16A | 05.02 => 09.08 | | | S9181 | 1987429181 | | | | |
| MINI | Mini Cooper II 1.6 S Turbo | (R55,R56,R57,R60)N14B16A | 11.06 => | OB0705 | 0986B00705 | S0151 | F026400151 | | | | |
| MITSUBISHI | Vehículos - Comerciales | | | | | | | | | | |
| MITSUBISHI | 3000 GT VR4 | 3.0i | | OB0002 | 0986B00002 | | | | | | |
| MITSUBISHI | Canter | 3.9D(FE639/649/659) | 99 => | OB0011 | 0986B00011 | | | | | | |
| MITSUBISHI | Colt GLX | 1.5 | 92 => 95 | OB0002 | 0986B00002 | | | | | | |
| MITSUBISHI | Colt GTI | 1.6i16v | 4-92 => 10-96 | | | | | | | | |
| MITSUBISHI | Colt GLX | 1.6i16v | 95 => | OB0002 | 0986B00002 | | | | | | |
| MITSUBISHI | Colt | 1.6i16v(CJ4A) | 05-96 => 12-00 | OB0002 | 0986B00002 | | | | | | |
| MITSUBISHI | Colt | 1.6i4G92 | 10-00 => | OB0002 | 0986B00002 | | | | | | |
| MITSUBISHI | Colt GTI | 1.8i16v | 12-91 => 11-95 | OB0002 | 0986B00002 | | | | | | |
| MITSUBISHI | Eclipse GSX - GS Turbo | 2.0i16V DOHC | | OB0002 | 0986B00002 | | | | | | |
| MITSUBISHI | Eclipse | 2.0Fi16V | 98 => | | | | | | | | |
| MITSUBISHI | Galant - Galant GTI | 1.8iEFI16v/2.0Fi24v-2.5Fi24v | 93 => 97 | OB0002 | 0986B00002 | | | | | | |
| MITSUBISHI | Galant | 2.0Fi16v DOHC | 93 => 96 | | | | | | | | |
| MITSUBISHI | Galant GTI | 2.0Fi24v | 93 => 97 | OB0002 | 0986B00002 | | | | | | |
| MITSUBISHI | Galant GTI | 2.5Fi24v | 93 => 97 | OB0002 | 0986B00002 | | | | | | |
| MITSUBISHI | Galant GLS TD | 2.0TDI | 9-96 => | OB0011 | 0986B00011 | | | | | | |
| MITSUBISHI | Lancer GLXi | 1.6i16v | 95 => 97 | OB0002 | 0986B00002 | | | | | | |
| MITSUBISHI | Lancer GLXi | 1.6i16v | 98 => | OB0002 | 0986B00002 | | | | | | |
| MITSUBISHI | Lancer GTi | 1.8i16v | 3-90 => 9-92 | | | | | | | | |
| MITSUBISHI | Lancer GLX | 2.0Diesel | 06-92 => | OB0011 | 0986B00011 | | | | | | |
| MITSUBISHI | Lancer VI | 1.3i12V4G13 | 5-96 => 9-03 | OB0002 | 0986B00002 | | | | | | |
| MITSUBISHI | Lancer VI | 1.5i16v4G15 | 12-95 => 9-03 | OB0002 | 0986B00002 | | | | | | |
| MITSUBISHI | Lancer VI | 1.6 16v4G92 | 12-95 => 9-03 | OB0002 | 0986B00002 | | | | | | |
| MITSUBISHI | Lancer VII | 1.3i-1.6i | 9-03 => | OB0002 | 0986B00002 | | | | | | |
| MITSUBISHI | Lancer VII | 2.0i | 9-03 => | OB0002 | 0986B00002 | | | | | | |
| MITSUBISHI | L 200 Diesel - Turbodiesel 4x2 4x4 | 2.5 | 91 => | OB0011 | 0986B00011 | | | DB0719 | 0986450719 | | |
| MITSUBISHI | L 200 - GL - GLS - GLX | 2.5D-2.5-2.8-TurboDiesel | 95 => | OB0011 | 0986B00011 | | | DB0719 | 0986450719 | | |
| MITSUBISHI | L 200 | 2.5TurboDiesel | 01 => | OB0011 | 0986B00011 | AB3002 | 0986B03002 | DB0719 | 0986450719 | | |
| MITSUBISHI | L 200 | 2.5TurboDiesel | | | | AB3400 | 0986B03400 | | | | |
| MITSUBISHI | L 300 | 1.6-1.8 | | | | | | | | | |

| MARCA | VEHÍCULO | MOTOR | FECHA | SC | ACEITE | SC | AIRE | SC | COMBUSTIBLE | SC | HABITÁCULO |
|---|---|---|---|---|---|---|---|---|---|---|---|
| MITSUBISHI | L 300 Minibus - Van | 2.5 TD | 06-91 => | OB0011 | 0986B00011 | | | DB0719 | 0986450719 | | |
| MITSUBISHI | Montero | 2.3 | | OB0011 | 0986B00011 | | | DB0719 | 0986450719 | | |
| MITSUBISHI | Montero | 2.0 16V | 01.03 => | OB0015 | 0986B00015 | | | | | | |
| MITSUBISHI | Montero GL - GLX | 2.4 iV6 | 4-91 => | OB0002 | 0986B00002 | | | | | | |
| MITSUBISHI | Montero GLX | 2.5 Turbo Diesel | 08-98 => | OB0011 | 0986B00011 | | | DB0719 | 0986450719 | | |
| MITSUBISHI | Montero GLS | 2.8 Turbo Diesel | 97 => | | | | | DB0719 | 0986450719 | | |
| MITSUBISHI | Montero GLS | 2.8 Turbo Diesel | 10-00 => | OB0011 | 0986B00011 | | | DB0719 | 0986450719 | | |
| MITSUBISHI | Montero GLS | 2.8 TDI 16v | 09-01 => | OB0011 | 0986B00011 | | | | | | |
| MITSUBISHI | Montero | 3.0 iv66 G72 | 97 => | | | | | | | | |
| MITSUBISHI | Montero Sport | 3.0 24v | 97 => | | | | | | | | |
| MITSUBISHI | Montero GLS | 3.2 Turbo Diesel 16v | | | | | | | | | |
| MITSUBISHI | Montero | 3.5 iV6 | 97 => | OB0011 | 0986B00011 | | | | | | |
| MITSUBISHI | Nativa GLS - GLX | 2.5 Turbo Diesel | | OB0011 | 0986B00011 | | | | | | |
| MITSUBISHI | Nativa LS | 3.0 iV6 | | OB0002 | 0986B00002 | | | | | | |
| MITSUBISHI | Outlander | 2.4i | | OB2354 | 0986452354 | | | | | | |
| MITSUBISHI | Sigma | 3.0 iV6 24v | | OB0002 | 0986B00002 | | | | | | |
| MITSUBISHI | Space Runner | 1.8 Mpi 16v DOHC 4G93 | | | | | | | | | |
| MITSUBISHI | Space Wagon GLX | 1.8i | 10-91 => | | | | | | | | |
| MITSUBISHI | Space Wagon GLX | 1.8i 16v | 05-91 => 5-92 | OB0002 | 0986B00002 | | | | | | |
| MITSUBISHI | Space Wagon | 1.8 EFI 16v SOHC 4G93 | 92 => 93 | | | | | | | | |
| MITSUBISHI | Space Wagon | 1.8 FI 16v 4G93 | 93 => | | | | | | | | |
| MITSUBISHI | Space Wagon GLX | 2.0 Turbo Diesel | | OB0011 | 0986B00011 | | | | | | |
| MITSUBISHI | Space Wagon | 2.0i | 05-92 => | | | | | | | | |
| MITSUBISHI | Space Wagon GLXi | 2.0i 16v | 93 => | | | | | | | | |
| MITSUBISHI | Space Wagon GLXi | 2.4i | | OB0002 | 0986B00002 | | | | | | |
| MITSUBISHI | Space Wagon Turbodiesel | 2.0 | 10-92 => | OB0011 | 0986B00011 | | | | | | |
| MITSUBISHI | Space Wagon | 2.4 16v | 97 => | | | | | | | | |
| NEW HOLLAND | Tractores _ Cosechadoras | | | | | | | | | | |
| NEW HOLLAND | Crop Cruiser | Caterpillar | | | | | | | | | |
| NEW HOLLAND | 55.56 | Fiat | | | | | | DB0732 | 0986450732 | | |
| NEW HOLLAND | 85 E Exitus | MWMBIO | 01.05 => | OB1000 | 0986B01000 | | | | | | |
| NEW HOLLAND | 70.56 - 70.66 - 80.66 | Fiat | | | | | | DB0695 | 0986450695 | | |
| NEW HOLLAND | 100.90 - 110.90 | Fiat | | OB1014 | 0986B01014 | | | DB0732 | 0986450732 | | |
| NEW HOLLAND | 115.90 | Fiat | | OB1014 | 0986B01014 | | | DB0695 | 0986450695 | | |
| NEW HOLLAND | 140.90 | Fiat | | | | AB3535(P) | 0986B03535 | DB0717 | 0986450717 | | |
| NEW HOLLAND | | | | | | | | | | | |
| NEW HOLLAND | | | | | | AB3904(S) | 0986B03904 | | | | |
| NEW HOLLAND | 160.90 - 180.90 | Fiat | | OB1015 | 0986B01015 | AB3535(P) | 0986B03535 | DB0732 | 0986450732 | | |
| NEW HOLLAND | | | | | | | | DB0717 | 0986450717 | | |

| MARCA | VEHÍCULO | MOTOR | FECHA | SC | ACEITE | SC | AIRE | SC | COMBUSTIBLE | SC | HABITÁCULO |
|---|---|---|---|---|---|---|---|---|---|---|---|
| NEW HOLLAND | | | | | | AB3904(S) | 0986B03904 | | | | |
| NEW HOLLAND | 446 - 666 - 880.5 - 980 | Fiat | | | | | | DB0695 | 0986450695 | | |
| NEW HOLLAND | 515 - 907 | DeutzF3L-912 | | | | | | DB0519 | 0986450519 | | |
| NEW HOLLAND | 600 E | Fiat | | | | | | DB0717 | 0986450717 | | |
| NEW HOLLAND | 780 R - B | Fiat | | | | | | DB0696 | 0986450696 | | |
| NEW HOLLAND | 780 - 880 | | | | | | | DB0695 | 0986450695 | | |
| NEW HOLLAND | 846 - 876 - 946 | Cummins | | OB1011 | 0986B01011 | | | | | | |
| NEW HOLLAND | | | | OB1020 | 0986B01020 | | | | | | |
| NEW HOLLAND | 880.5 | Fiat | | OB1014 | 0986B01014 | | | DB0732 | 0986450732 | | |
| NEW HOLLAND | 905 - 910 - 912 | Ford172 | | OB3325 | 0451103325 | | | DB0695 | 0986450695 | | |
| NEW HOLLAND | 950 - 955 - 956 - 975 - 976 - 1150 - 1156 | Cummins | | OB1020 | 0986B01020 | | | | | | |
| NEW HOLLAND | 980 | | | OB1014 | 0986B01014 | | | DB0695 | 0986450695 | | |
| NEW HOLLAND | | | | | | | | DB0732 | 0986450732 | | |
| NEW HOLLAND | 1049 - 1069 | Ford361-460 | | | | | | | | | |
| NEW HOLLAND | 1075 | Perkins | | OB3325 | 0451103325 | | | DB0695 | 0986450695 | | |
| NEW HOLLAND | 1085 | | | | | | | DB0519 | 0986450519 | | |
| NEW HOLLAND | | | | | | | | RB0583(SR) | 0986450583 | | |
| NEW HOLLAND | 1100 | Ford2300 | | OB3325 | 0451103325 | | | | | | |
| NEW HOLLAND | 1100 - 1112 - 1114 - 1116 - 1118 | | | OB3325 | 0451103325 | | | DB0519 | 0986450519 | | |
| NEW HOLLAND | 1180 - 1380 | Fiat | | OB1014 | 0986B01014 | | | | | | |
| NEW HOLLAND | | | | | | | | | | | |
| NEW HOLLAND | 1280 - 1281 - 1290 | Ford172 | | | | | | DB0695 | 0986450695 | | |
| NEW HOLLAND | 1283 | | | | | | | | | | |
| NEW HOLLAND | 1400 | Perkins | | | | | | DB0695 | 0986450695 | | |
| NEW HOLLAND | 1495 | Caterpillar3150 | | | | | | | | | |
| NEW HOLLAND | 1495 - 1496 | Perkins | | OB3325 | 0451103325 | | | DB0695 | 0986450695 | | |
| NEW HOLLAND | 1499 | | | | | | | DB0695 | 0986450695 | | |
| NEW HOLLAND | | | | | | | | DB0694 | 0986450694 | | |
| NEW HOLLAND | 1500 - 1880 - 1890 | Caterpillar3208 | | | | | | DB0718 | 0986450718 | | |
| NEW HOLLAND | 1580 - 1880 | Fiat | | OB1015 | 0986B01015 | | | DB0717 | 0986450717 | | |
| NEW HOLLAND | 1800 | Daf | | P3220 | 0451203220 | | | | | | |
| NEW HOLLAND | 1880 | Caterpillar3150 | | | | | | | | | |
| NEW HOLLAND | 1895 - 1900 - 1915 | Caterpillar3306 | | | | | | DB0312 | 0986BF0312 | | |
| NEW HOLLAND | 1905 | Daf | | OB1027 | 0986B01027 | | | | | | |
| NEW HOLLAND | 2100 | Caterpillar3406 | | | | | | | | | |
| NEW HOLLAND | 2450 - 2550 | Genesis | | OB1008 | 0986B01008 | | | DB0732 | 0986450732 | | |
| NEW HOLLAND | 3830 - 4030 - 4230 - 4430 | Fiat | | | | | | DB0732 | 0986450732 | | |
| NEW HOLLAND | 4600 | | | OB3325 | 0451103325 | | | DB0695 | 0986450695 | | |
| NEW HOLLAND | 4610 | | | OB3325 | 0451103325 | | | DB0695 | 0986450695 | | |

| MARCA | VEHÍCULO | MOTOR | FECHA | SC | ACEITE | SC | AIRE | SC | COMBUSTIBLE | SC | HABITÁCULO |
|---|---|---|---|---|---|---|---|---|---|---|---|
| NEW HOLLAND | | | | | | | | RB0582(SR) | 0986450582 | | |
| NEW HOLLAND | 4610 - 5610 - 6610 - 7610 | Ford | 85 => | OB1025 | 0986B01025 | | | DB0695 | 0986450695 | | |
| NEW HOLLAND | 4630 - 4630 Narrow | Genesis | 93 => | | | AB3511(P) | 0986B03511 | DB0732 | 0986450732 | | |
| NEW HOLLAND | | | | HB1907(H) | 0986B01907 | AB3903(S) | 0986B03903 | | | | |
| NEW HOLLAND | 4835 - 5635 | Fiat | 95 => | | | | | DB0732 | 0986450732 | | |
| NEW HOLLAND | 5030 - 5030 Narrow | Genesis | 93 => | | | AB3511(P) | 0986B03511 | DB0732 | 0986450732 | | |
| NEW HOLLAND | | | | HB1907(H) | 0986B01907 | AB3903(S) | 0986B03903 | | | | |
| NEW HOLLAND | 5530 | Fiat | | | | | | DB0732 | 0986450732 | | |
| NEW HOLLAND | 5600 - 5700 - 5710 | | | OB3325 | 0451103325 | | | DB0694 | 0986450694 | | |
| NEW HOLLAND | | | | | | | | DB0695 | 0986450695 | | |
| NEW HOLLAND | 5630 | Genesis | 93 => | | | AB3511(P) | 0986B03511 | DB0732 | 0986450732 | | |
| NEW HOLLAND | | | | HB1907(H) | 0986B01907 | AB3903(S) | 0986B03903 | | | | |
| NEW HOLLAND | 6530 | Fiat | | | | | | DB0695 | 0986450695 | | |
| NEW HOLLAND | 6630 | Genesis | 93 => | | | AB3511(P) | 0986B03511 | DB0732 | 0986450732 | | |
| NEW HOLLAND | | | | HB1907(H) | 0986B01907 | AB3903(S) | 0986B03903 | | | | |
| NEW HOLLAND | 6635 - 7530 - 7635 | Fiat | | OB1014 | 0986B01014 | | | DB0732 | 0986450732 | | |
| NEW HOLLAND | 7610 | Ford | 85 => | P3220 | 0451203220 | | | DB0695 | 0986450695 | | |
| NEW HOLLAND | 7610 | | | | | | | DB0694 | 0986450694 | | |
| NEW HOLLAND | | | | | | | | DB0695 | 0986450695 | | |
| NEW HOLLAND | 7630 | Genesis | 93 => | | | AB3511(P) | 0986B03511 | DB0732 | 0986450732 | | |
| NEW HOLLAND | | | | HB1907(H) | 0986B01907 | AB3903(S) | 0986B03903 | | | | |
| NEW HOLLAND | 7810 | Ford | 88 => | | | | | DB0694 | 0986450694 | | |
| NEW HOLLAND | 7830 | Genesis | 93 => | | | AB3511(P) | 0986B03511 | DB0732 | 0986450732 | | |
| NEW HOLLAND | | | | HB1907(H) | 0986B01907 | AB3903(S) | 0986B03903 | | | | |
| NEW HOLLAND | 8030 | Genesis | 93 => | | | AB3511(P) | 0986B03511 | DB0732 | 0986450732 | | |
| NEW HOLLAND | | | | HB1907(H) | 0986B01907 | AB3903(S) | 0986B03903 | | | | |
| NEW HOLLAND | 8040 | MercedesBenz | 90 => | | | AB3535(P) | 0986B03535 | DB0702o | 0986450702 | | |
| NEW HOLLAND | | | | | | AB3904(S) | 0986B03904 | DB0200 | 0986BF0200 | | |
| NEW HOLLAND | 8055 | Ford | 90 => | | | AB3513(P) | 0986B03513 | DB0519(P) | 0986450519 | | |
| NEW HOLLAND | | | | | | AB3905(S) | 0986B03905 | DB0519(S) | 0986450519 | | |
| NEW HOLLAND | 8055 | MBOM352A | 92 => | OB1565 | 0986B01565 | AB3535(P) | 0986B03535 | DB0704 | 0986450704 | | |
| NEW HOLLAND | | | | | | AB3904(S) | 0986B03904 | DB0200 | 0986BF0200 | | |
| NEW HOLLAND | 8055 | NewHolland | | OB1015 | 0986B01015 | AB3513(P) | 0986B03513 | DB0732 | 0986450732 | | |
| NEW HOLLAND | 8055 | NewHolland | | HB1652(DH) | 0986B01652 | AB3905(S) | 0986B03905 | | | | |
| NEW HOLLAND | 8360 - 8560 - 8670 - 8770 - 8870 - 8970 | NewHolland | | | | | | DB0708(BoxSA) | 0986450708 | | |
| NEW HOLLAND | 8430 | | 93 => | OB1015 | 0986B01015 | AB3535(P) | 0986B03535 | DB0695(P) | 0986450695 | | |
| NEW HOLLAND | | | | | | AB3904(S) | 0986B03904 | DB0695(S) | 0986450695 | | |
| NEW HOLLAND | 8630 | | 93 => | OB1015 | 0986B01015 | AB3535(P) | 0986B03535 | DB0717 | 0986450717 | | |
| NEW HOLLAND | | | | | | AB3904(S) | 0986B03904 | | | | |

| MARCA | VEHÍCULO | MOTOR | FECHA | SC | ACEITE | SC | AIRE | SC | COMBUSTIBLE | SC | HABITÁCULO |
|---|---|---|---|---|---|---|---|---|---|---|---|
| NEW HOLLAND | 8830 | | 93 => | OB1015 | 0986B01015 | AB3535(P) | 0986B03535 | DB0717 | 0986450717 | | |
| NEW HOLLAND | | | | | | AB3904(S) | 0986B03904 | | | | |
| NEW HOLLAND | 9820 - 9840 - 9860 - 9880 | Cummins | | OB1011 | 0986B01011 | | | | | | |
| NEW HOLLAND | | | | OB1043 | 0986B01043 | | | | | | |
| NEW HOLLAND | SP 818 - 985 - 995 | | | | | | | | | | |
| NEW HOLLAND | TC 55 | Genesis | 93 => | OB1015 | 0986B01015 | AB3513(P) | 0986B03513 | DB0732(P) | 0986450732 | | |
| NEW HOLLAND | | | | OB1027 | 0986B01027 | AB3905(S) | 0986B03905 | DB0732(S) | 0986450732 | | |
| NEW HOLLAND | TC 57 | Genesis | 93 => | OB1015 | 0986B01015 | AB3513(P) | 0986B03513 | DB0732(P) | 0986450732 | | |
| NEW HOLLAND | | | | OB1027 | 0986B01027 | AB3905(S) | 0986B03905 | DB0732(S) | 0986450732 | | |
| NEW HOLLAND | TC 59 | Genesis | | OB1015 | 0986B01015 | AB3515(P) | 0986B03515 | DB0708(BoxSA) | 0986450708 | | |
| NEW HOLLAND | | | | | | | | | | | |
| NEW HOLLAND | TL 65 - 70 - 80 - 90 - 100 | | | | | | | DB0732 | 0986450732 | | |
| NEW HOLLAND | TM 120 - 140 | | | P3220 | 0451203220 | | | | | | |
| NEW HOLLAND | TR 70 - TR 75 - TR 85 - TR 86 - TR 95 - TR 96 | Caterpillar 3208-636 | | | | | | DB0312 | 0986BF0312 | | |
| NEW HOLLAND | TR 70 | Ford 361 | | OB3325 | 0451103325 | | | | | | |
| NEW HOLLAND | TR 70 - TR 75 | Ford 363 TD | | | | | | DB0695 | 0986450695 | | |
| NEW HOLLAND | TR 86 | Ford 474 | | OB1012 | 0986B01012 | | | DB0519 | 0986450519 | | |
| NEW HOLLAND | | | | | | | | RB0583(SR) | 0986450583 | | |
| NEW HOLLAND | TR 87 | | | P3220 | 0451203220 | AB3513(P) | 0986B03513 | DB0732 | 0986450732 | | |
| NEW HOLLAND | | | | | | AB3905(S) | 0986B03905 | DB0708(BoxSA) | 0986450708 | | |
| NEW HOLLAND | TR 96 - TR 97 | Ford 678 | | OB1012 | 0986B01012 | | | DB0519 | 0986450519 | | |
| NEW HOLLAND | TR 97 | | | P3220 | 0451203220 | AB3513(P) | 0986B03513 | DB0732 | 0986450732 | | |
| NEW HOLLAND | | | | | | AB3905(S) | 0986B03905 | | | | |
| NEW HOLLAND | TR 98 | | | | | AB3513(P) | 0986B03513 | DB0732 | 0986450732 | | |
| NEW HOLLAND | | | | | | AB3905(S) | 0986B03905 | | | | |
| NEW HOLLAND | TX 36 - TX 66 | Ford 678 | 91 => | | | AB3515(P) | 0986B03515 | DB0732 | 0986450732 | | |
| NEW HOLLAND | | | | | | | | DB0519 | 0986450519 | | |
| NEW HOLLAND | TX 68 | Iveco | 91 => | P7049 | F026407049 | AB3536(P) | 0986B03536 | DB0717 | 0986450717 | | |
| NEW HOLLAND | | | | | | | | | | | |
| NISSAN | | | | | | | | | | | |
| NISSAN | 200 - 240 | 2.0i-2.4i | => 00 | OB0017 | 0986B00017 | | | | | | |
| NISSAN | 300 ZX | 3.0i | => 01 | | | | | | | | |
| NISSAN | 350 Z | 3.5i | 05 => | | | | | | | | |
| NISSAN | AD Wagon | 2.0D | | | | | | | | | |
| NISSAN | Bluebird | 1.8 | 11-83 => | | | | | | | | |
| NISSAN | Bluebird | 2.0i | 93 => | | | | | | | | |
| NISSAN | ECO T. 100 | 3.0D | | | | AB3004 | 0986B03004 | | | | |
| NISSAN | Frontier TDI | 2.8 Turbo Diesel | 06.02 => | OB1016 | 0986B01016 | AB3002(P) | 0986B03002 | DB0308 | 0986BF0308 | | |
| NISSAN | | | | | | AB3400(S) | 0986B03400 | DB0851 | 0986450851 | | |

| MARCA | VEHÍCULO | MOTOR | FECHA | SC | ACEITE | SC | AIRE | SC | COMBUSTIBLE | SC | HABITÁCULO |
|---|---|---|---|---|---|---|---|---|---|---|---|
| NISSAN | Frontier TDI (Electónica) | 2.8TD(4.07TCEMWMSPRINT) | 11.06 => | OB1016 | 0986B01016 | AB2286(P) | 1457432286 | DB0365 | 0986BF0365 | | |
| NISSAN | | | | | | | | DB0405 | 0986BF0405 | | |
| NISSAN | March | 1.616v(HR16DE) | 01.12 => | P7210 | F026407210 | AB2532 | 0986B02532 | GB0024 | 0986BF0024 | | |
| NISSAN | Maxima G - GV | 3.0i24v | 95 => | | | | | | | | |
| NISSAN | Murano 3.5 V6 | VQ35DE | 09.08 => | P7210 | F026407210 | | | | | | |
| NISSAN | Murano 3.5 V6 | VQ35DE | 09.08 => | OB0023 | 0986B00023 | | | | | | |
| NISSAN | Note | 1.616v(HR16DE) | 03.15 => | P7210 | F026407210 | AB2527 | 0986B02527 | | | | |
| NISSAN | NX 100 | 2.0i | | | | | | | | | |
| NISSAN | Pathfinder | 2.7TurboDiesel | 12-99 => | | | | | | | | |
| NISSAN | Pathfinder SE | 3.3iV6 | 08-99 => 02-01 | P7210 | F026407210 | | | | | | |
| NISSAN | Pathfinder SE | 3.3iV6 | 08-99 => 02-01 | OB0023 | 0986B00023 | | | | | | |
| NISSAN | Pathfinder 3.3 EVG | R50 | 02.01 => | P7210 | F026407210 | | | | | | |
| NISSAN | Pathfinder 3.3 EVG | R50 | 02.01 => | OB0023 | 0986B00023 | | | | | | |
| NISSAN | Pathfinder | 3.5i | 04 => | OB0023 | 0986B00023 | | | | | | |
| NISSAN | Pathfinder 3.5 V6 SE Luxuri | | | P7210 | F026407210 | S3275 | 1457433275 | DB0234 | 0986BF0234 | | |
| NISSAN | Pathfinder 2.5 dci | YD25DDTi | 03.05 => | P2003 | 0986452003 | | | DB0355 | 0986BF0355 | | |
| NISSAN | Pathfinder 2.7 TD T | WD21 | | OB0015 | 0986B00015 | S3275 | 1457433275 | DB0234 | 0986BF0234 | | |
| NISSAN | Patrol ST | 2.7TurboDiesel | | | | | | | | | |
| NISSAN | Patrol | 2.8Diesel | | | | AB3534 | 0986B03534 | | | | |
| NISSAN | Patrol | 2.8TurboDiesel | | | | | | | | | |
| NISSAN | Pick Up | 2.5TDI | 01 => | | | | | | | | |
| NISSAN | Pick up DX - LX | 2.7Diesel | 98 => | OB3325 | 0451103325 | | | DB0719 | 0986450719 | | |
| NISSAN | Pick Up | 3.2Diesel | => 03 | | | | | | | | |
| NISSAN | Pick Up | 3.0iV6 | => 98 | OB0023 | 0986B00023 | | | | | | |
| NISSAN | Primera GX - GXE | 2.0i16v | 97 => | P7210 | F026407210 | | | | | | |
| NISSAN | Primera GX - GXE | 2.0i16v | 97 => | OB0023 | 0986B00023 | | | | | | |
| NISSAN | Primera GX - GXE | 2.0i16v | 9-96 => | | | | | F5201 | 0450905201 | | |
| NISSAN | Primera II | 2.0D | 09.96 => | P7210 | F026407210 | | | | | | |
| NISSAN | Primera II | 2.0D | 09.96 => | OB0023 | 0986B00023 | | | | | | |
| NISSAN | Sentra | 1.3GL/SX/GXE | 87 => 91 | | | | | F2151 | 0450902151 | | |
| NISSAN | Sentra GXE | 1.6i | 01.96 => | | | S9051 | 1987429051 | GB0234 | 0450905324 | | |
| NISSAN | Sentra GXE | 1.6i16v | | | | | | | | | |
| NISSAN | Sentra | 2.016v(MT-AT)MR20 | 04.11 => | P7210 | F026407210 | AB9606 | 1987429606 | | | | |
| NISSAN | Sentra | 1.816vMRA8DE | 11.14 => | P7210 | F026407210 | | | | | | |
| NISSAN | Serena | 1.6i16vSLX | 09.93 => | | | | | F5201 | 0450905201 | | |
| NISSAN | Serena SLX | 2.0i | | | | | | GB0234 | 0986450234 | | |
| NISSAN | Terrano II 2.7 TD | TD27T | 02.93 => 12.01 | | | "S3154/S3275" | 1457433154/1457433275 | "DB0234/DB0355" | 0986BF0234/0986BF0355 | | |
| NISSAN | Terrano II 2.7 Tdi | TD27TI | 05.96 => 06.05 | | | "S3154 /S3275" | 1457433154/1457433275 | "DB0234 /DB0355" | 0986BF0234/0986BF0355 | | |
| NISSAN | Tiida | 1.816v | 01.08 => | P7210 | F026407210 | AB2527 | 0986B02527 | | | | |

| MARCA | VEHÍCULO | MOTOR | FECHA | SC | ACEITE | SC | AIRE | SC | COMBUSTIBLE | SC | HABITÁCULO |
|---|---|---|---|---|---|---|---|---|---|---|---|
| NISSAN | Versa | 1.6 16v (HR16DE) | 06.13 => | P7210 | F026407210 | AB2532 | 0986B02532 | | | | |
| NISSAN | X - Terra | MWM 2.8 Turbo Diesel | 01.03 => | OB1016 | 0986B01016 | AB3002 | 0986B03002 | DB0308 | 0986BF0308 | | |
| NISSAN | X - Trail | 2.2 Turbo Diesel | 05 => | | | | | | | | |
| NISSAN | X - Trail T 30 | 2.5i | 02.03 => 06.07 | P7210 | F026407210 | | | | | | |
| NISSAN | X - Trail T 30 | 2.5i | 02.03 => 06.07 | OB0023 | 0986B00023 | | | | | | |
| NISSAN | X - Trail 2.2 dci | YD22ETi | 01.05 => | P2003 | 0986452003 | S9051 | 1987429051 | DB0234 | 0986BF0234 | | |
| NISSAN | X - Trail II T 31 | 2.5 16v | 07.07 => | P7210 | F026407210 | | | | | | |
| NISSAN | X - Trail II T 31 | 2.5 16v | 07.07 => | OB0023 | 0986B00023 | | | | | | |
| PERKINS | Motores | | | | | | | | | | |
| PERKINS | 3.152 - 4.203 | | => 77 | OB3325 | 0451103325 | AB3534(P) | 0986B03534 | DB0695 | 0986450695 | | |
| PERKINS | 4203 | | => 85 | OB3325 | 0451103325 | AB3534(P) | 0986B03534 | | | | |
| PERKINS | | | | | | | | | | | |
| PERKINS | 4.203 Potenciado | | => 87 | OB3325 | 0451103325 | AB2034 | 0986B02034 | | | | |
| PERKINS | 4 PA.203 Potenciado | | 87 => | OB3325 | 0451103325 | | | DB0695 | 0986450695 | | |
| PERKINS | 6 354 | | 73 => | OB1028 | 0986B01028 | AB3511(P) | 0986B03511 | DB0695 | 0986450695 | | |
| PERKINS | 6.354 F4 Turbo | | | OB1028 | 0986B01028 | AB3535(P) | 0986B03535 | DB0695 | 0986450695 | | |
| PERKINS | | | | | | AB3904(S) | 0986B03904 | | | | |
| PERKINS | 6.PF 305 - 6.354 | | 77 => | OB1028 | 0986B01028 | AB3511(P) | 0986B03511 | DB0695 | 0986450695 | | |
| PERKINS | 6.354 T - 6.354.4 | | 77 => | OB1028 | 0986B01028 | AB3535 | 0986B03535 | DB0695 | 0986450695 | | |
| PERKINS | Prima 4.20 | | | | | | | DB0732 | 0986450732 | | |
| PERKINS | | | | | | | | DB0695 | 0986450695 | | |
| PERKINS | Prima T 4.20 | | | | | AB3526 | 0986B03526 | DB0732 | 0986450732 | | |
| PERKINS | | | | | | | | DB0695 | 0986450695 | | |
| PERKINS | V8.540 | | | OB1028 | 0986B01028 | AB3535(P) | 0986B03535 | | | | |
| PERKINS | | | | | | AB3904(S) | 0986B03904 | | | | |
| PEUGEOT | Vehículos - Comerciales | | | | | | | | | | |
| PEUGEOT | 106 | 1.1i | 03-00 => | P9193 | 1457429193 | S3769 | 1457433769 | GB0024 | 0986BF0024 | | |
| PEUGEOT | 106 | 1.1i | | OB0002 | 0986B00002 | S3227 | 1457433227 | GB0024 | 0986BF0024 | | |
| PEUGEOT | 106 | 1.4i | 11.97 => | OB0002 | 0986B00002 | S3227 | 1457433227 | GB0024 | 0986BF0024 | | |
| PEUGEOT | | | | | | | | F2161 | 0450902161 | | |
| PEUGEOT | 106 | 1.4i | 03-00 => | P9193 | 1457429193 | S3769 | 1457433769 | GB0024 | 0986BF0024 | | |
| PEUGEOT | 106 | 1.5 Diesel | | OB0002 | 0986B00002 | | | | | | |
| PEUGEOT | 106 | 1.6i 16s | | OB0002 | 0986B00002 | S3227 | 1457433227 | GB0024 | 0986BF0024 | | |
| PEUGEOT | | | | P9193 | 1457429193 | | | F2161 | 0450902161 | | |
| PEUGEOT | 205 | 1.4 8v GL | 10.87 => 10.90 | OB0002 | 0986B00002 | S3227 | 1457433227 | GB0024 | 0986BF0024 | | |
| PEUGEOT | | | | | | | | F2161 | 0450902161 | | |
| PEUGEOT | 205 | 1.6i-1.9i-TU3MC-TU3M | => 06.94 | OB0002 | 0986B00002 | | | | | | |
| PEUGEOT | 205 | 1.6i-1.9i-XU5JA-XU9JA | => 06.94 | OB0002 | 0986B00002 | | | | | | |
| PEUGEOT | 205 | 1.8D XUD7 | 05.92 => 12.00 | OB0002 | 0986B00002 | AB2025 | 0986B02025 | DB0204 | 0986BF0204 | | Nolleva |

| MARCA | VEHÍCULO | MOTOR | FECHA | SC | ACEITE | SC | AIRE | SC | COMBUSTIBLE | SC | HABITÁCULO |
|---|---|---|---|---|---|---|---|---|---|---|---|
| PEUGEOT | 206 | 1.4i TU3JP (KFW) | 01.01 => | OB0002 | 0986B00002 | AB2312 | 0986B02312 | GB0024 | 0986BF0024 | CB0533 | 0986BF0533 |
| PEUGEOT | | | | P9193 | 1457429193 | | | | | | |
| PEUGEOT | | | | OB0705 | 0986B00705 | | | | | | |
| PEUGEOT | 206 | 1.4HDI | | OB0711 | 0986B00711 | | | | | | |
| PEUGEOT | 206 | 1.6i8V TU5JP(NZF) | 10.99=>10.03 | OB0002 | 0986B00002 | AB2312 | 0986B02312 | GB0024 | 0986BF0024 | CB0533 | 0986BF0533 |
| PEUGEOT | 206 | 1.6 16v TU5JP4 (NFU) | 02.02 =>09.09 | OB0705 | 0986B00705 | AB2312 | 0986B02312 | GB0024 | 0986BF0024 | CB0533 | 0986BF0533 |
| PEUGEOT | | | | | | | | F2161 | 0450902161 | | |
| PEUGEOT | 206 | 1.6i 16v | => 06.94 | P9193 | 1457429193 | AB2312 | 0986B02312 | GB0024 | 0986BF0024 | CB0533 | 0986BF0533 |
| PEUGEOT | 206 | 1.6 16v Quicksilver TU5JP4 | 01.02 => | P9193 | 1457429193 | AB2500 | 0986B02500 | GB0024 | 0986BF0024 | | |
| PEUGEOT | | | | | | | | F2161 | 0450902161 | | |
| PEUGEOT | 206 | 1.9Diesel | 10.99 => | OB0002 | 0986B00002 | AB2016 | 0986B02016 | DB0207 | 0986BF0207 | CB0533 | 0986BF0533 |
| PEUGEOT | | | | | | AB2500 | 0986B02500 | DB0204 | 0986BF0204 | | |
| PEUGEOT | 206 GTI | 2.0i16V | | OB0002 | 0986B00002 | AB2016 | 0986B02016 | GB0024 | 0986BF0024 | CB0533 | 0986BF0533 |
| PEUGEOT | | | | | | AB2500 | 0986B02500 | F2161 | 0450902161 | | |
| PEUGEOT | 206 | 2.0iS16/CCEW10J4 | 10.00 => | OB0002 | 0986B00002 | AB2339 | 0986B02339 | GB0024 | 0986BF0024 | | |
| PEUGEOT | | | | | | | | F2161 | 0450902161 | | |
| PEUGEOT | 206 | 2.0HDI 90 CV DW10TD(RHY) | 12.99 => | OB0002 | 0986B00002 | AB2016 | 0986B02016 | DB0423 DB0209 | 0986BF0423/0986BF0209 | CB0533 | 0986BF0533 |
| PEUGEOT | 206 | 2.0HDi 110 DW10ATED | 04.99 => | OB0002 | 0986B00002 | S0010 | F026400010 | DB0423 DB0209 | 0986BF0423/0986BF0209 | CB0533 | 0986BF0533 |
| PEUGEOT | 207 | 1.4i (Compact) TU3JP | 10.08 => | OB0705 | 0986B00705 | AB2373 | 0986B02373 | GB0024 | 0986BF0024 | CB0533 | 0986BF0533 |
| PEUGEOT | 207 | 1.4Hdi DV4TD/TED/TED4,DV4C | 01.11 =>01.12 | OB0711 | 0986B00711 | S3076 | 1457433076 | N6460 | 0450906460 | CB0533 | 0986BF0533 |
| PEUGEOT | 207 | 1.4Hdi DV4TD/TED/TED4,DV4C | 01.12 => | OB0711 | 0986B00711 | S3076 | 1457433076 | N2862 | F026402862 | CB0533 | |
| PEUGEOT | 207 | 1.6 (Compact) TU5JP4 | 10.08 => | OB0705 | 0986B00705 | AB2354 | 0986B02354 | GB0024 | 0986BF0024 | CB0533 | 0986BF0533 |
| PEUGEOT | | | | | | | | F2161 | 0450902161 | | |
| PEUGEOT | 207 | 1.6 16v Turbo EP6DT | 09.06 =>09.09 | OB0705 | 0986B00705 | S0151 | F026400151 | GB0024 | 0986BF0024 | M2136 | 1987432136 |
| PEUGEOT | | | | | | | | F2161 | 0450902161 | | |
| PEUGEOT | 207 | 1.6 16v Turbo RC EP6DTS | 02.07 => | OB0705 | 0986B00705 | S0151 | F026400151 | | | M2136 | 1987432136 |
| PEUGEOT | 207 | 1.9Diesel DW8 | 11.08 => | OB0002 | 0986B00002 | AB2374 | 0986B02374 | DB0207 | 0986BF0207 | CB0533 | 0986BF0533 |
| PEUGEOT | 207 | 2.0HDi (Compact) DW10TD 90CV | 10.08 => | OB0002 | 0986B00002 | AB2376 | 0986B02376 | DB0423 | 0986BF0423 | CB0533 | 0986BF0533 |
| PEUGEOT | 208 | 1.5i8v | 08.13 => | OB0705 | 0986B00705 | AB2518 | 0986B02518 | GB0024 | 0986BF0024 | M2136 | 1987432136 |
| PEUGEOT | 208 | 1.6iVti EC5 | 08.13 => | OB0705 | 0986B00705 | AB2518 | 0986B02518 | GB0024 | 0986BF0024 | M2136 | 1987432136 |
| PEUGEOT | 208 | 1.6Feline | 03.17 => | | 0986B00705 | | 0986B02518 | | 0986BF0024 | | 1987432136 |
| PEUGEOT | 208 | 1.6HDI DV6DTED | 03.17 => | OB0711 | 0986B00711 | AB2509 | 0986B02509 | N2862 | F026402862 | M2136 | 1987432136 |
| PEUGEOT | 306 | 1.6i TU5JP NFZ | 02.95 =>10.00 | OB0002 | 0986B00002 | AB2025 | 0986B02025 | GB0024 | 0986BF0024 | | |
| PEUGEOT | 306 | 1.8i | | OB0002 | 0986B00002 | AB2339 | 0986B02339 | GB0024 | 0986BF0024 | | |
| PEUGEOT | 306 | 1.8i 16v | | OB0002 | 0986B00002 | S3527 | 1457433527 | GB0024 | 0986BF0024 | | |
| PEUGEOT | 306 | 2.0i 16v | | OB0002 | 0986B00002 | S3527 | 1457433527 | GB0024 | 0986BF0024 | | |
| PEUGEOT | 306 | 1.9Diesel | => 05.97 | OB0002 | 0986B00002 | AB2025 | 0986B02025 | DB0204 | 0986BF0204 | | |
| PEUGEOT | | | 06-97 => | | | AB2026 | 0986B02026 | | | | |
| PEUGEOT | 306 | 1.9TD XRD/XND | => 04.97 | OB0002 | 0986B00002 | | | DB0204 | 0986BF0204 | | |

| MARCA | VEHÍCULO | MOTOR | FECHA | SC | ACEITE | SC | AIRE | SC | COMBUSTIBLE | SC | HABITÁCULO |
|---|---|---|---|---|---|---|---|---|---|---|---|
| PEUGEOT | 306 | 1.9TD-DHY(XUD9TE) | 01.99 =>10.02 | OB0002 | 0986B00002 | | | DB0204 | 0986BF0204 | | |
| PEUGEOT | 306 | 1.9TD | 04-00 => | OB0002 | 0986B00002 | AB0026 | 0986B02026 | DB0204 | 0986BF0204 | | |
| PEUGEOT | 306 | 2.0HDIDiesel | 10-99 => | OB0002 | 0986B00002 | "S3555/S0010" | 1457433555/F026400010 | "DB0209/N7001" | 0986BF0209/0450907001 | | |
| PEUGEOT | 307 1.6 i 16v | TU5JP4(NFU) | 03.01 => | P9193 | 1457429193 | S3090 | 1457433090 | GB0024 | 0986BF0024 | CB0546 | 0986BF0546 |
| PEUGEOT | | | | OB0002 | 0986B00002 | AB2354 | 0986B02354 | F2161 | 0450902161 | | |
| PEUGEOT | | | 06.04 => | OB0705 | 0986B00705 | | | | | | |
| PEUGEOT | 307 1.6 i 16v Sedan | TU5JP4(NFU) | 04.06=> | OB0705 | 0986B00705 | AB2354 | 0986B02354 | GB0024 | 0986BF0024 | CB0546 | 0986BF0546 |
| PEUGEOT | | | | | | | | F2161 | 0450902161 | | |
| PEUGEOT | 307 1.6 HDi Diesel | DV6TED4 | 10.05 => | OB0711 | 0986B00711 | AB2505 | 0986B02505 | N7006 | 0450907006 | CB0546 | 0986BF0546 |
| PEUGEOT | 307 2.0i 16v | EW10J4 | 06.01 => 05.05 | OB0002 | 0986B00002 | S3090 | 1457433090 | GB0024 | 0986BF0024 | CB0546 | 0986BF0546 |
| PEUGEOT | | | | P9193 | 1457429193 | | | F2161 | 0450902161 | | |
| PEUGEOT | 307 2.0 16v | RFN(EW10J4S) | 09.03 => | OB0002 | 0986B00002 | S3150 | 1457433150 | GB0024 | 0986BF0024 | | |
| PEUGEOT | 307 2.0i 16v | EW10A | 08.06 => | OB0705 | 0986B00705 | AB2369 | 0986B02369 | GB0024 | 0986BF0024 | CB0546 | 0986BF0546 |
| PEUGEOT | | | | | | | | F2161 | 0450902161 | | |
| PEUGEOT | 307 CC | 2.0 | 06.01 => 05.05 | OB0002 | 0986B00002 | S3150 | 1457433150 | GB0024 | 0986BF0024 | CB0546 | 0986BF0546 |
| PEUGEOT | | | | | | | | F2161 | 0450902161 | | |
| PEUGEOT | 307 2.0 HDI 90cv | DW10TD(RHY) | 03.01 => 05.05 | OB0002 | 0986B00002 | S3150 | 1457433150 | DB0423 | 0986BF0423 | CB0546 | 0986BF0546 |
| PEUGEOT | | | | | | | | "DB0209/N7001" | 0986BF0209/0450907001 | | |
| PEUGEOT | 307 2.0 HDI 110cv | DW10ATED4 | 06-01 => | OB0002 | 0986B00002 | S3150 | 1457433150 | DB0423 | 0986BF0423 | CB0546 | 0986BF0546 |
| PEUGEOT | | | | | | | | "DB0209/N7001" | 0986BF0209/0450907001 | | |
| PEUGEOT | 307 2.0 HDI 8v | | 06.05 => | OB0002 | 0986B00002 | S3150 | 1457433150 | DB0423 | 0986BF0423 | CB0546 | 0986BF0546 |
| PEUGEOT | 308 1.6 16v Turbo | EP6DT | 09.07 => | OB0705 | 0986B00705 | | | GB0024 | 0986BF0024 | CB0546 | 0986BF0546 |
| PEUGEOT | 308 1.6 THP | EP6DT | 12.09 => | OB0705 | 0986B00705 | AB2515 | 0986B02515 | GB0024 | 0986BF0024 | CB0546 | 0986BF0546 |
| PEUGEOT | 308 1.6 HDI | DV6CM | 12.11 => | OB0711 | 0986B00711 | AB2509 | 0986B02509 | N2862 | F026402862 | CB0546 | 0986BF0546 |
| PEUGEOT | 308 2.0 16v | EW10A | 12.11 => | OB0705 | 0986B00705 | AB2369 | 0986B02369 | GB0024 | 0986BF0024 | CB0546 | 0986BF0546 |
| PEUGEOT | 308 1.6 16v | EP6 | 01.12 => | OB0705 | 0986B00705 | AB2518 | 0986B02518 | GB0024 | 0986BF0024 | CB0546 | 0986BF0546 |
| PEUGEOT | 308 1.6 GTI | EP6CDTX | 05.12 => | OB0705 | 0986B00705 | AB2515 | 0986B02515 | | Filtro de por vida | CB0546 | 0986BF0546 |
| PEUGEOT | 3008 | 1.6THP (EP6CDT) | 09.10=> | OB0705 | 0986B00705 | AB2515 | 0986B02515 | GB0024 | 0986BF0024 | CB0656 | 0986BF0656 |
| PEUGEOT | 3008 | 1.6HDI(DV6ATED4) | 05.10 => | OB0711 | 0986B00711 | AB2505 | 0986B02505 | N2862 | F026402862 | CB0656 | 0986BF0656 |
| PEUGEOT | 3008 | 2.0HDI(DW10CTED4) | 02.13 => | OB0705 | 0986B00705 | | | DB0027 | 0986BF0027 | CB0656 | 0986BF0656 |
| PEUGEOT | 405 | 1.6i | | OB0002 | 0986B00002 | AB2339 | 0986B02339 | GB0024 | 0986BF0024 | | |
| PEUGEOT | 405 | 1.8i | | OB0002 | 0986B00002 | AB2339 | 0986B02339 | GB0234 | 0986450234 | | |
| PEUGEOT | 405 | 1.9i | | OB0002 | 0986B00002 | AB2343 | 0986B02343 | GB0234 | 0986450234 | | |
| PEUGEOT | 405 | 1.9Diesel-1.9TurboDiesel | | OB0002 | 0986B00002 | AB2343 | 0986B02343 | DB0204 | 0986BF0204 | | |
| PEUGEOT | 405 | 2.0i8v | | OB0002 | 0986B00002 | AB2339 | 0986B02339 | GB0024 | 0986BF0024 | | |
| PEUGEOT | 405 | 2.0i 16v | | OB0002 | 0986B00002 | | | GB0024 | 0986BF0024 | | |
| PEUGEOT | 406 | 1.816v | | OB0002 | 0986B00002 | AB2343 | 0986B02343 | GB0024 | 0986BF0024 | | |
| PEUGEOT | 406 | 1.9TurboDiesel | | OB0002 | 0986B00002 | AB2343 | 0986B02343 | DB0204 | 0986BF0204 | | |
| PEUGEOT | 406 | 2.016v | | OB0002 | 0986B00002 | AB2343 | 0986B02343 | GB0024 | 0986BF0024 | | |

| MARCA | VEHÍCULO | MOTOR | FECHA | SC | ACEITE | SC | AIRE | SC | COMBUSTIBLE | SC | HABITÁCULO |
|---|---|---|---|---|---|---|---|---|---|---|---|
| PEUGEOT | 406 2.0 HDI 90 cv | DW10TD | 02.99 => | OB0002 | 0986B00002 | AB2343 | 0986B02343 | DB0423 | 0986BF0423 | | |
| PEUGEOT | | | | | | | | "DB0209/N7001" | 0986BF0209/0450907001 | | |
| PEUGEOT | 406 2.0 HDI 112 cv | DW10ATED4 | 02.99 => | OB0002 | 0986B00002 | AB2343 | 0986B02343 | DB0423 | 0986BF0423 | | |
| PEUGEOT | | | | | | | | "DB0209/N7001" | 0986BF0209/0450907001 | | |
| PEUGEOT | 406 | 2.1 Turbo Diesel | | OB0002 | 0986B00002 | AB2343 | 0986B02343 | DB0204 | 0986BF0204 | | |
| PEUGEOT | 406 | 2.2 16v | 04-99 => | OB0002 | 0986B00002 | AB2343 | 0986B02343 | GB0024 | 0986BF0024 | | |
| PEUGEOT | 406 | 3.0 V6 | | OB0002 | 0986B00002 | AB2343 | 0986B02343 | GB0024 | 0986BF0024 | | |
| PEUGEOT | 407 2.0 16v | EW10J4 | 04.04 => | OB0002 | 0986B00002 | S3591 | 1457433591 | | | | |
| PEUGEOT | 407 2.0 16v | EW10A(103kw-140cv) | 05.05 => | OB0002 /OB0705 | 0986B00002/0986B00705 | S3591 | 1457433591 | N1723 | 1457431723 | R2311 | 1987432311 |
| PEUGEOT | 407 2.2 16v | EW12J4 | 04.04 => | OB0002 | 0986B00002 | S3591 | 1457433591 | GB0024 | 0986BF0024 | R2311 | 1987432311 |
| PEUGEOT | 407 2.0 HDI SW | | 05 => | OB0705/OB0002 | 0986B00705/0986B00002 | S3596 | 1457433596 | N1723 | 1457431723 | R2412 | 1987432412 |
| PEUGEOT | 407 2.0 HDI 135 | DW10BTED4 | 04.04 => | OB0705 | 0986B00705 | S3596 | 1457433596 | N1723 | 1457431723 | R2311 | 1987432311 |
| PEUGEOT | 407 | 3.0iV6 24v(155kw-211cv) | 05 => | OB0002 | 0986B00002 | S3591 | 1457433591 | GB0024 | 0986BF0024 | R2311 | 1987432311 |
| PEUGEOT | 408 | 1.6HDI (DV6TED4) | 04.11 => | OB0711 | 0986B00711 | AB2509 | 0986B02509 | N2862 | F026402862 | CB0546 | 0986BF0546 |
| PEUGEOT | 408 | 1.6THP (EP6CDT) | 08.11 => | OB0705 | 0986B00705 | AB2515 | 0986B02515 | GB0024 | 0986BF0024 | CB0546 | 0986BF0546 |
| PEUGEOT | 408 | 2.016V (EW10A) | 12.10 => | OB0705 | 0986B00705 | AB2369 | 0986B02369 | GB0024 | 0986BF0024 | CB0546 | 0986BF0546 |
| PEUGEOT | 4008 | 2.016V(MMC4B11) | 01.14 => | | | | | | | CB0657 | 0986BF0657 |
| PEUGEOT | 504 | 2.0 | 01.83 =>10.00 | OB0002 | 0986B00002 | | | GB0008 | 0986BF0008 | | |
| PEUGEOT | 504 | 2.38vSLD/GD/GRD | 07.97 => | OB0037 | 0986B00037 | AB3506 | 0986B03506 | DB0695 | 0986450695 | | |
| PEUGEOT | 504 | 2.3D Pick-Up | 01.95 => | OB0037 | 0986B00037 | AB3506 | 0986B03506 | DB0695 | 0986450695 | | |
| PEUGEOT | 505 | 2.0 | | OB0037 | 0986B00037 | | | GB0008 | 0986BF0008 | | |
| PEUGEOT | 505 | 2.0i | 87 => 92 | OB0037 | 0986B00037 | | | | | | |
| PEUGEOT | 505 | 2.0i | 92 => | OB0037 | 0986B00037 | | | GB0234 | 0986450234 | | |
| PEUGEOT | 505 | 2.2i | | OB0037 | 0986B00037 | AB9603 | 1987429603 | GB0234 | 0986450234 | | |
| PEUGEOT | 505 | 2.3Diesel | | OB0037 | 0986B00037 | AB9603 | 1987429603 | DB0211 | 0986BF0211 | | |
| PEUGEOT | 505 | 2.3Diesel Turbo | | OB0002 | 0986B00002 | AB9603 | 1987429603 | DB0211 | 0986BF0211 | | |
| PEUGEOT | 508 | 1.616vTHP | 05.12 => | OB0705 | 0986B00705 | AB2515 | 0986B02515 | GB0024 | 0986BF0024 | | |
| PEUGEOT | 508 | 2.0HDI (DW10CTED4) | 10.12 => | OB0705 | 0986B00705 | S3596 | 1457433596 | DB0027 | 0986BF0027 | | |
| PEUGEOT | 508 | 2.2HDI (DW12C) | 05.12 => | OB0705 | 0986B00705 | S3596 | 1457433596 | | | | |
| PEUGEOT | 5008 | 1.616vTHP(EP6DT) | 01.12=> | OB0705 | 0986B00705 | AB2515 | 0986B02515 | GB0024 | 0986BF0024 | CB0656 | 0986BF0656 |
| PEUGEOT | 605 | 2.0i | | OB0002 | 0986B00002 | | | GB0234 | 0986450234 | | |
| PEUGEOT | 605 | 3.0iV6 | | OB0002 | 0986B00002 | | | GB0234 | 0986450234 | | |
| PEUGEOT | 607 | 2.2i16v | | OB0002 | 0986B00002 | AB2343 | 0986B02343 | GB0024 | 0986BF0024 | | |
| PEUGEOT | 607 | 3.0V6 | | OB0002 | 0986B00002 | AB2343 | 0986B02343 | GB0024 | 0986BF0024 | | |
| PEUGEOT | 806 | 2.0i | | OB0002 | 0986B00002 | AB2343 | 0986B02343 | GB0024 | 0986BF0024 | | |
| PEUGEOT | 806 | 2.0HDI | | OB0002 | 0986B00002 | AB2343 | 0986B02343 | DB0423 | 0986BF0423 | | |
| PEUGEOT | 807 | 2.016vHDiTurboDiesel | 04 => | OB0002 | 0986B00002 | AB2343 | 0986B02343 | DB0423 | 0986BF0423 | | |
| PEUGEOT | Boxer I | 1.9Diesel | 01.96 => | OB0002 | 0986B00002 | AB3554 | 0986B03554 | DB0695 | 0986450695 | CB0510 | 0986BF0510 |
| PEUGEOT | Boxer I | 1.9Diesel Turbo | 07.94 => | OB0002 | 0986B00002 | AB2282 | 1457432282 | DB0695 | 0986450695 | CB0510 | 0986BF0510 |

| MARCA | VEHÍCULO | MOTOR | FECHA | SC | ACEITE | SC | AIRE | SC | COMBUSTIBLE | SC | HABITÁCULO |
|---|---|---|---|---|---|---|---|---|---|---|---|
| PEUGEOT | | | | OB0002 | 0986B00002 | | | | | | |
| PEUGEOT | Boxer I | 2.5Diesel-2.5DieselTurbo | 01.96 => | OB0002 | 0986B00002 | AB3554 | 0986B03554 | DB0695 | 0986450695 | CB0510 | 0986BF0510 |
| PEUGEOT | Boxer I 2.8 DI | F28D | | OB0002 | 0986B00002 | AB2282 | 1457432282 | DB0695 | 0986450695 | CB0510 | 0986BF0510 |
| PEUGEOT | Boxer I | 2.8HDI | 09.00 => 03.02 | OB1001 | 0986B01001 | AB2282 | 1457432282 | N4194 | 1457434194 | CB0510 | 0986BF0510 |
| PEUGEOT | Boxer II 2.8 HDI | 8140.43S | 01.07 => | OB1001 | 0986B01001 | AB2282 | 1457432282 | N0001 | 1457070001 | CB0510 | 0986BF0510 |
| PEUGEOT | Expert | 1.9Diesel | | OB0002 | 0986B00002 | AB2343 | 0986B02343 | DB0204 | 0986BF0204 | | |
| PEUGEOT | Expert | 1.9Dieselc/motorDW8 | | OB0002 | 0986B00002 | AB2343 | 0986B02343 | DB0207 | 0986BF0207 | | |
| PEUGEOT | Expert | 2.0HDiDiesel | 06 => | OB0002 | 0986B00002 | AB2343 | 0986B02343 | DB0423 | 0986BF0423 | | |
| PEUGEOT | Expert II | 1.6HDI90(DV6TED4) | 02.08 =>12.11 | OB0711 | 0986B00711 | | | N7006 | 0450907006 | | |
| PEUGEOT | Expert II | 1.6HDI90(DV6TED4) | 01.12 => | OB0711 | 0986B00711 | AB2509 | 0986B02509 | N2862 | F026402862 | | |
| PEUGEOT | Expert II | 2.0HDI120(DW10UTED4) | 01.07 | OB0705 | 0986B00705 | | | N1723 | 1457431723 | | |
| PEUGEOT | Hoggar | 1.616vTU5JP4 | 08.11 => | OB0705 | 0986B00705 | AB2354 | 0986B02354 | GB0024 | 0986BF0024 | CB0533 | 0986BF0533 |
| PEUGEOT | Partner 1.4i | TU3JP | 04.03 => | P9193 | 1457429193 | S3325 | 1457433325 | GB0024 | 0986BF0024 | | |
| PEUGEOT | | | | OB0705 | 0986B00705 | S3158 | 1457433158 | F2161 | 0450902161 | | |
| PEUGEOT | Partner 1.4i | TU3JP | 01.04 => | OB0002 | 0986B00002 | S3769 | 1457433769 | GB0024 | 0986BF0024 | | |
| PEUGEOT | | | | P9193 | 1457429193 | | | F2161 | 0450902161 | | |
| PEUGEOT | Partner 1.8 170 C GNC | XU7JB | 01.01 => | OB0002 | 0986B00002 | AB2339 | 0986B02339 | GB0024 | 0986BF0024 | | |
| PEUGEOT | | | | | | | | F2161 | 0450902161 | | |
| PEUGEOT | Partner | 1.9Diesel | 01.97 => | OB0002 | 0986B00002 | AB2016 | 0986B02016 | DB0204 | 0986BF0204 | | |
| PEUGEOT | | | | | | AB2025 | 0986B02025 | DB0207 | 0986BF0207 | CB0576 | 0986BF0576 |
| PEUGEOT | Partner | 1.9DDW8B | 11.02 => | OB0002 | 0986B00002 | AB2026 | 0986B02026 | DB0207 | 0986BF0207 | CB0576 | 0986BF0576 |
| PEUGEOT | Partner | 1.9DPatagonicaDW8 | 01.01 => | OB0002 | 0986B00002 | AB2026 | 0986B02026 | DB0207 | 0986BF0207 | | |
| PEUGEOT | Partner | 1.9Diesel | 01.06 => | OB0002 | 0986B00002 | | | DB0207 | 0986BF0207 | | |
| PEUGEOT | Partner | 2.0HDIRHYDW10TD | 02.99 => 03.06 | OB0002 | 0986B00002 | S3555 | 1457433555 | DB0209 N7001 | 0986BF0209/0450907001 | | |
| PEUGEOT | | | | | | | | DB0423 | 0986BF0423 | | |
| PEUGEOT | Partner | 2.0HDIRHYDW10TD | 11.02 => | OB0002 | 0986B00002 | S3555 | 1457433555 | DB0423 | 0986BF0423 | CB0576 | 0986BF0576 |
| PEUGEOT | Partner | 1.6iTU5JP4 | 01.04 =>10.10 | OB0705 | 0986B00705 | S3325 | 1457433325 | GB0024 | 0986BF0024 | | |
| PEUGEOT | Partner II | 1.616VTU5JP4 | 11.10 => | OB0705 | 0986B00705 | AB2518 | 0986B02518 | GB0024 | 0986BF0024 | CB0656 | 0986BF0656 |
| PEUGEOT | Partner II | 1.6HDIFAPDV6BTED4,DV6ETED4 | 03.10 => | OB0711 | 0986B00711 | AB2505 | 0986B02505 | N7006 | 0450907006 | CB0656 | 0986BF0656 |
| PEUGEOT | Partner II | 1.6HDIFAPDV6BTED4/DV6CETD | 09.11 => | OB0711 | 0986B00711 | AB2509 | 0986B02509 | N2862 | F026402862 | CB0656 | 0986BF0656 |
| PEUGEOT | Partner II | 1.4iTU3JP(KFX) | 05.10 => | P9193 | 1457429193 | AB2518 | 0986B02518 | GB0024 | 0986BF0024 | CB0576 | 0986BF0576 |
| PEUGEOT | RCZ | 1.616VTHP (EP6CDTX) | 01.11 => | OB0705 | 0986B00705 | AB2515 | 0986B02515 | | Filtrodeporvida | CB0546 | 0986BF0546 |
| RENAULT | Vehículos - Comerciales | | | | | | | | | | |
| RENAULT | Clio | 1.4 | | OB3332 | 0451103332 | AB2030 | 0986B02030 | GB0008 | 0986BF0008 | | |
| RENAULT | Clio | 1.4i | | OB3332 | 0451103332 | AB2030 | 0986B02030 | GB0024 | 0986BF0024 | | |
| RENAULT | Clio | 1.6i C2L | 02.96 => 10.98 | OB3332 | 0451103332 | AB2030 | 0986B02030 | GB0234 | 0986450234 | | |
| RENAULT | | | | | | | | F5201 | 0450905201 | | |
| RENAULT | Clio | 1.6i C3L-794 | 03.91=>08.00 | OB3332 | 0451103332 | AB2030 | 0986B02030 | GB0234 | 0986450234 | | |
| RENAULT | Clio | 1.8i | | OB3332 | 0451103332 | AB2024 | 0986B02024 | GB0024 | 0986BF0024 | | |

| MARCA | VEHÍCULO | MOTOR | FECHA | SC | ACEITE | SC | AIRE | SC | COMBUSTIBLE | SC | HABITÁCULO |
|---|---|---|---|---|---|---|---|---|---|---|---|
| RENAULT | Clio | 1.9D | 01.98 => | OB0056 | 0986B00056 | AB2024 | 0986B02024 | DB0206 | 0986BF0206 | | |
| RENAULT | | | 01.99 => | | | | | DB0208 | 0986BF0208 | | |
| RENAULT | Clio | 1.9Diesel F8Q c/bomba BOSCH | => 02.98 | OB3332 | 0451103332 | AB2024 | 0986B02024 | DB0211 | 0986BF0211 | | |
| RENAULT | Clio | 1.9Diesel F8Q c/bomba CAV-LUCAS | => 02.98 | OB3332 | 0451103332 | AB2024 | 0986B02024 | DB0206 | 0986BF0206 | | |
| RENAULT | Clio Williams | 2.0i | | OB3332 | 0451103332 | | | GB0234 | 0986450234 | | |
| RENAULT | | | | | | | | F5201 | 0450905201 | | |
| RENAULT | Clio 2 | 1.2i8vD7F | | | | AB2331 | 0986B02331 | GB0024 | 0986BF0024 | CB0550 | 0986BF0550 |
| RENAULT | Clio 2 1.2 16v Brasilero | D4F728 | 01.05 => | OB0701 | 0986B00701 | AB3575 | 0986B03575 | GB0024 | 0986BF0024 | CB0550 | 0986BF0550 |
| RENAULT | Clio 2 1.2 16v | D4F712/722 | 01.01 => | OB0513 | 0986B00513 | AB2331 | 0986B02331 | GB0024 | 0986BF0024 | CB0550 | 0986BF0550 |
| RENAULT | Clio 2 1.5 Dci Turbo Diesel | K9K718/K9K716 | 06.01=>09.05 | OB3332 | 0451103332 | AB2506 | 0986B02506 | N7011 | 0450907011 | CB0550 | 0986BF0550 |
| RENAULT | Clio 2 RN -RT 1.6 16v | K7M | 01.00 => | OB3332 | 0451103332 | AB2333 | 0986B02333 | GB0024 | 0986BF0024 | CB0550 | 0986BF0550 |
| RENAULT | Clio 2 1.6i 8v | K7M746 | | OB3332 | 0451103332 | AB2052 | 0986B02052 | GB0024 | 0986BF0024 | CB0550 | 0986BF0550 |
| RENAULT | Clio 2 1.6 16v | K4M-748 | 09.98 => 09.05 | OB3332 | 0451103332 | AB2333 | 0986B02333 | GB0024 | 0986BF0024 | CB0550 | 0986BF0550 |
| RENAULT | Clio 2 Dinamique Brasilero | 1.6i16v | 01.00 => | OB3332 | 0451103332 | AB2333 | 0986B02333 | GB0024 | 0986BF0024 | CB0550 | 0986BF0550 |
| RENAULT | Clio 2 D 1.9 RN/RT | F8Q676 | 07.01=> | OB3332 | 0451103332 | AB2335 | 0986B02335 | DB0205 | 0986BF0205 | CB0550 | 0986BF0550 |
| RENAULT | Clio 2 D 1.9 RN/RT | | 01.00 => | OB0056 | 0986B00056 | S3161 | 1457433161 | DB0208 | 0986BF0208 | CB0550 | 0986BF0550 |
| RENAULT | Clio 2 1.9 DTi Diesel | F9Q-780 | 01.00 | OB3332 | 0451103332 | AB2342 | 0986B02342 | DB0208 | 0986BF0208 | CB0550 | 0986BF0550 |
| RENAULT | Clio 2 2.0i 16v Sport | 2.0i16vF4R730/732/736 | 03.00=>01.04 | OB3332 | 0451103332 | AB2052 | 0986B02052 | GB0024 | 0986BF0024 | CB0550 | 0986BF0550 |
| RENAULT | Clio Mio | 1.216v D4F-728 | 10.12 => | OB0513 | 0986B00513 | AB3575 | 0986B03575 | GB0024 | 0986BF0024 | CB0550 | 0986BF0550 |
| RENAULT | Duster | 1.616V (K4M-690) | 10.11 => | OB3332 | 0451103332 | AB2333 | 0986B02333 | GB0024 | 0986BF0024 | CB0581 | 0986BF0581 |
| RENAULT | Duster | 2.016V (F4R) | 10.11 => | P7210 | F026407210 | S0441 | F026400441 | GB0024 | 0986BF0024 | CB0581 | 0986BF0581 |
| RENAULT | Duster Dakar 4x4 | 2.016V | 12.16 => | | | | | | | CB0581 | 0986BF0581 |
| RENAULT | Duster-Oroch | 1.616v (K4M) | 11.14 => | OB3332 | 0451103332 | AB2333 | 0986B02333 | GB0024 | 0986BF0024 | CB0581 | 0986BF0581 |
| RENAULT | Duster-Oroch | 2.016v (F4R-400) | 11.14 => | P7210 | F026407210 | S0441 | F026400441 | GB0024 | 0986BF0024 | CB0581 | 0986BF0581 |
| RENAULT | Express | 1.9Diesel c/bomba BOSCH | | P3240 | 0451103240 | AB2024 | 0986B02024 | DB0211 | 0986BF0211 | | |
| RENAULT | Express | 1.9Diesel c/bomba CAV-LUCAS | 01.98 => | OB0056 | 0986B00056 | AB2024 | 0986B02024 | DB0206 | 0986BF0206 | | Nolleva |
| RENAULT | | | 01.99 => | | | | | DB0208 | 0986BF0208 | | |
| RENAULT | Fluence 1.6 16v | K4M838/839 | 02.10 => | OB3332 | 0451103332 | AB2513 | 0986B02513 | GB0024 | 0986BF0024 | | |
| RENAULT | Fluence 2.0 16v | M4R714/751 | 11.2010=> | P7210 | F026407210 | AB514 | 0986B02514 | GB0024 | 0986BF0024 | | |
| RENAULT | Fuego | 2.0-2.2 | | OB0006 | 0986B00006 | AB9603 | 1987429603 | GB0008 | 0986BF0008 | | |
| RENAULT | Kangoo | 1.2i8vD7F766 | | OB0513 | 0986B00513 | AB2335 | 0986B02335 | GB0024 | 0986BF0024 | CB0550 | 0986BF0550 |
| RENAULT | Kangoo | 1.2i8vD7F720/726/744/746 | | OB0701 | 0986B00701 | AB2335 | 0986B02335 | GB0024 | 0986BF0024 | CB0550 | 0986BF0550 |
| RENAULT | | | | | | AB2331 | 0986B02331 | | | | |
| RENAULT | Kangoo | 1.4iE7J634/635-K7J700/701 | | OB3332 | 0451103332 | AB2052 | 0986B02052 | GB0024 | 0986BF0024 | CB0550 | 0986BF0550 |
| RENAULT | Kangoo | 1.4iE7J780 | 11.98 => | OB3332 | 0451103332 | AB2339 | 0986B02339 | GB0024 | 0986BF0024 | CB0550 | 0986BF0550 |
| RENAULT | Kangoo | 1.5DCiTDK9K702/710 | 04.02 => | OB3332 | 0451103332 | AB2506 | 0986B02506 | N7011 | 0450907011 | CB0550 | 0986BF0550 |
| RENAULT | Kangoo | 1.616vK4M706 | 01.03 => | OB3332 | 0451103332 | AB2333 | 0986B02333 | GB0024 | 0986BF0024 | CB0550 | 0986BF0550 |
| RENAULT | Kangoo | 1.9Diesel F8Q c/bomba BOSCH | 01.99 => | OB0056 | 0986B00056 | AB2335 | 0986B02335 | DB0205 | 0986BF0205 | CB0550 | 0986BF0550 |
| RENAULT | Kangoo | 1.9Diesel F8Q c/bomba CAV-LUCAS | 01.99 => | OB0056 | 0986B00056 | AB2335 | 0986B02335 | DB0208 | 0986BF0208 | CB0550 | 0986BF0550 |

| MARCA | VEHÍCULO | MOTOR | FECHA | SC | ACEITE | SC | AIRE | SC | COMBUSTIBLE | SC | HABITÁCULO |
|---|---|---|---|---|---|---|---|---|---|---|---|
| RENAULT | Kangoo | 1.9 Diesel F8Q 632 c/bomba BOSCH | 08.05 => | OB3332 | 0451103332 | AB2051 | 0986B02051 | DB0205 | 0986BF0205 | CB0550 | 0986BF0550 |
| RENAULT | Kangoo | 1.9 Diesel F8Q 632 c/bomba CAV-LUCAS | | OB3332 | 0451103332 | AB2051 | 0986B02051 | DB0208 | 0986BF0208 | CB0550 | 0986BF0550 |
| RENAULT | Kangoo | 1.9 Diesel F9Q | 01.99 => | OB3332 | 0451103332 | AB2335 | 0986B02335 | DB0205 | 0986BF0205 | CB0550 | 0986BF0550 |
| RENAULT | Kangoo | 1.9 D Authentiq/Plus/Expression FQ8-630 | 01.03 => | OB3332 | 0451103332 | AB2335 | 0986B02335 | DB0208 | 0986BF0208 | CB0550 | 0986BF0550 |
| RENAULT | Kangoo II | 1.5 dci K9K 800 | 02.08 => | OB3332 | 0451103332 | AB2506 | 0986B02506 | | | CB0550 | 0986BF0550 |
| RENAULT | Kangoo II | 1.6 16v K4M-730 | 02.03=> | OB3332 | 0451103332 | AB2052 | 0986B02052 | GB0024 | 0986BF0024 | CB0550 | 0986BF0550 |
| RENAULT | Koleos 2.5 | 2TRB-700 | 09.08 => | P7210 | F026407210 | | | | | | |
| RENAULT | Laguna | 1.8i 16v | | OB3332 | 0451103332 | AB2333 | 0986B02333 | GB0024 | 0986BF0024 | | |
| RENAULT | Laguna | 1.9dTi | | OB3332 | 0451103332 | | | DB0208 | 0986BF0208 | | |
| RENAULT | Laguna | 2.0i 8v F3R-F3P | => 01 | OB3332 | 0451103332 | S3260 | 1457433260 | | | | |
| RENAULT | Laguna | 2.0i 16v N7Q | | | | S3743 | 1457433743 | GB0024 | 0986BF0024 | | |
| RENAULT | Laguna | 2.0i 16v F4R | | OB3332 | 0451103332 | AB2333 | 0986B02333 | GB0024 | 0986BF0024 | | |
| RENAULT | Laguna I | 2.2 Diesel | => 01 | P7106 | F026407106 | | | N4291 | 1457434291 | | |
| RENAULT | Laguna | 3.0i V6 Z7X | => 01 | | | | | | | | |
| RENAULT | Laguna | 3.0i V6 24v | | | | | | GB0024 | 0986BF0024 | | |
| RENAULT | Laguna II | 1.9dCi | | OB3332 | 0451103332 | | | DB0210 | 0986BF0210 | | |
| RENAULT | Laguna II | 1.9Dti RXE | | OB3332 | 0451103332 | S3161 | 1457433161 | | | | |
| RENAULT | Laguna II | 3.0i V6 24v | | P3299 | 0451103299 | | | GB0024 | 0986BF0024 | | |
| RENAULT | Latitude | 2.0 16v M4R | 02.11 => | | | | | GB0024 | 0986BF0024 | | |
| RENAULT | Logan 1.6 16v | K4M-706 | 02.07 => | OB3332 | 0451103332 | AB2333 | 0986B02333 | GB0024 | 0986BF0024 | CB0581 | 0986BF0581 |
| RENAULT | Logan 1.5 dci | K9K-700 | 02.07 => | OB3332 | 0451103332 | AB2506 | 0986B02506 | N2019 | F026402019 | CB0581 | 0986BF0581 |
| RENAULT | Logan 1.6 8v | K7M-710 | 05.08 =>03.14 | OB3332 | 0451103332 | AB2052 | 0986B02052 | GB0024 | 0986BF0024 | CB0550 | 0986BF0550 |
| RENAULT | Logan 1.6 8v | K7M-710 | 03.14 => | OB3332 | 0451103332 | AB2382 | 0986B02382 | GB0024 | 0986BF0024 | CB0550 | 0986BF0550 |
| RENAULT | Master 2.5 Diesel | 58U | | OB1001 | 0986B01001 | AB2341 | 0986B02341 | DB0210 | 0986BF0210 | | |
| RENAULT | Master II | 2.5D | 01.99 => | P7106 | F026407106 | AB2341 | 0986B02341 | DB0210 | 0986BF0210 | | |
| RENAULT | Master II 2.5 DCI 16v | GNU-724 | 01.05 =>09.09 | OB0710 | 0986B00710 | AB3574 | 0986B03574 | N1720 | 1457431720 | | |
| RENAULT | | | 10.09 => | | | | | DB0231 | 0986BF0231 | | |
| RENAULT | Master III 2.5 DCI 120 | G9U-750 | 10.03 => 07.06 | OB0710 | 0986B00710 | AB3574 | 0986B03574 | N1720 | 1457431720 | | No lleva |
| RENAULT | | | | | | | | DB0231 | 0986BF0231 | | |
| RENAULT | Master III | 2.3 DCI M97696 | 05.13 => | | | AB2380 | 0986B02380 | DB0231 | 0986BF0231 | | |
| RENAULT | Master 2.8 DTI | S9W-700/702 | 07.98 => 11.01 | OB1001 | 0986B01001 | AB2341 | 0986B02341 | DB0210 | 0986BF0210 | | |
| RENAULT | Master 2.8 TD | 59U | 01.01 =>12.03 | OB1001 | 0986B01001 | AB2341 | 0986B02341 | DB0210 | 0986BF0210 | | |
| RENAULT | | | 01.04=> | | | AB3574 | 0986B03574 | | | | |
| RENAULT | Master 2.8 DTI | | 01.99 => | P7106 | F026407106 | AB2341 | 0986B02341 | DB0210 | 0986BF0210 | | |
| RENAULT | Megane I | 1.6i | | OB3332 | 0451103332 | AB2030 | 0986B02030 | GB0024 | 0986BF0024 | | |
| RENAULT | Megane I | 1.6i RN,RT,Coupe K7M | 10.97 => | OB3332 | 0451103332 | AB2030 | 0986B02030 | GB0024 | 0986BF0024 | CB0528 | 0986BF0528 |
| RENAULT | Megane I | 1.9 Turbo Diesel F8Q | | OB3332 | 0451103332 | AB2021 | 0986B02021 | DB0205 | 0986BF0205 | | |
| RENAULT | Megane I | 1.9 TDF8Q 784 | 10.97 => | OB0056 | 0986B00056 | AB2021 | 0986B02021 | DB0204 | 0986BF0204 | CB0528 | 0986BF0528 |
| RENAULT | | | | | | | | DB0205 | 0986BF0205 | | |

| MARCA | VEHÍCULO | MOTOR | FECHA | SC | ACEITE | SC | AIRE | SC | COMBUSTIBLE | SC | HABITÁCULO |
|---|---|---|---|---|---|---|---|---|---|---|---|
| RENAULT | Megane I | 1.9dF8Q622 | 03.99 => | OB3332 | 0451103332 | AB2333 | 0986B02333 | DB0205 | 0986BF0205 | | |
| RENAULT | Megane I | 1.9dTiTurboDiesel F9Q731-736 | 03.99 => | OB3332 | 0451103332 | AB2342 | 0986B02342 | DB0205 | 0986BF0205 | | |
| RENAULT | | | | | | | | | | CB0550 | 0986BF0550 |
| RENAULT | Megane I | 2.0iRT,RXE F3R | 10.97 => | OB3332 | 0451103332 | | | GB0024 | 0986BF0024 | CB0528 | 0986BF0528 |
| RENAULT | Megane Scenic | 1.9TDRT(F9Q) | 04.98 => | OB0056 | 0986B00056 | AB2021 | 0986B02021 | DB0204 | 0986BF0204 | CB0565 | 0986BF0565 |
| RENAULT | Megane II 1.5 DCI | K9K-728THP | 01.06 => | OB3332 | 0451103332 | S0441 | F026400441 | N6469 | 0450906469 | | |
| RENAULT | Megane II 1.5 DCI | K9K-722 | 10.02 => 06.05 | OB3332 | 0451103332 | S0441 | F026400441 | N6469 | 0450906469 | | |
| RENAULT | Megane II 1.6 16v | K4M706(81kw/110cv) | 07.02 => 11.09 | OB3332 | 0451103332 | AB2333 | 0986B02333 | GB0024 | 0986BF0024 | CB0551 | 0986BF0551 |
| RENAULT | Megane II 1.9 dCi | F9Q-800(88kw/120cv) | 10.02 => 06.05 | OB3332 | 0451103332 | S3573 | 1457433573 | DB0210 | 0986BF0210 | | |
| RENAULT | Megane II 1.9 TdCi | F9Q | 05 => | OB3332 | 0451103332 | S3573 | 1457433573 | DB0210 | 0986BF0210 | | |
| RENAULT | Megane II 2.0 16v | F4R-770M | 10.02 => | OB3332 | 0451103332 | S3573 | 1457433573 | GB0024 | 0986BF0024 | | |
| RENAULT | Megane III 2.0 16V | M4R711 | 04.09 => | P7210 | F026407210 | AB2513 | 0986B02513 | GB0024 | 0986BF0024 | | |
| RENAULT | R 9 | 1.4-1.6 | => 89 | OB0035 | 0986B00035 | AB2028 | 0986B02028 | GB0008 | 0986BF0008 | | Nolleva |
| RENAULT | R 9 | 1.4-1.6 | 90 => | OB0036 | 0986B00036 | AB2028 | 0986B02028 | GB0008 | 0986BF0008 | | Nolleva |
| RENAULT | R 9 | 1.6C2L-790 | 04.94 =>11.97 | OB0035 | 0986B00035 | AB2028 | 0986B02028 | GB0008 | 0986BF0008 | | Nolleva |
| RENAULT | R 11 | 1.4-1.6 | => 89 | OB0035 | 0986B00035 | AB2028 | 0986B02028 | GB0008 | 0986BF0008 | | |
| RENAULT | R 11 | 1.4-1.6 | 90 => | OB0036 | 0986B00036 | AB2028 | 0986B02028 | GB0008 | 0986BF0008 | | |
| RENAULT | R 12 | 1.4 | => 89 | OB0035 | 0986B00035 | AB2031 | 0986B02031 | GB0008 | 0986BF0008 | | |
| RENAULT | R 12 | 1.4-1.6 | 90 => | OB0036 | 0986B00036 | AB2031 | 0986B02031 | GB0008 | 0986BF0008 | | |
| RENAULT | R 12 | 1.6 | 92 => | OB0036 | 0986B00036 | | | GB0008 | 0986BF0008 | | |
| RENAULT | R 18 | 1.4-1,6 | => 89 | OB0035 | 0986B00035 | AB2031 | 0986B02031 | GB0008 | 0986BF0008 | | |
| RENAULT | R 18 | 1.4-1.6 | 90 => | OB0036 | 0986B00036 | AB2031 | 0986B02031 | GB0008 | 0986BF0008 | | |
| RENAULT | R 18 | 2.0-2.2 | | OB0006 | 0986B00006 | AB9603 | 1987429603 | GB0008 | 0986BF0008 | | |
| RENAULT | R 18 | LX-TX-GTX-Break | => 11.84 | OB0014 | 0986B00014 | AB9603 | 1987429603 | GB0008 | 0986BF0008 | | |
| RENAULT | | | | OB0006 | 0986B00006 | | | | | | |
| RENAULT | R 18 | 2.1Diesel | | OB0006 | 0986B00006 | | | DB0694 | 0986450694 | | |
| RENAULT | R 19 | 1.6i | | OB3332 | 0451103332 | AB2028 | 0986B02028 | GB0008 | 0986BF0008 | | |
| RENAULT | R 19 | 1.6C2L-790 | 01.94=>11.01 | OB3332 | 0451103332 | AB9603 | 1987429603 | GB0234 | 0986450234 | | |
| RENAULT | | | | | | | | F5201 | 0450905201 | | |
| RENAULT | R 19 | 1.7-1.8 | | OB3332 | 0451103332 | | | GB0008 | 0986BF0008 | | |
| RENAULT | R 19 | 1.8i-1.8i16v | | OB3332 | 0451103332 | | | GB0234 | 0986450234 | | |
| RENAULT | R 19 | 1.9Diesel F8Q-740 | 92 => | OB0006 | 0986B00006 | | | DB0695 | 0986450695 | | |
| RENAULT | R 21 | 2.0 | | OB0006 | 0986B00006 | AB9603 | 1987429603 | GB0008 | 0986BF0008 | | |
| RENAULT | R 21 | 2.0i-2.2i | | OB0006 | 0986B00006 | AB9603 | 1987429603 | GB0234 | 0986450234 | | |
| RENAULT | | | | | | | | F5201 | 0450905201 | | |
| RENAULT | R 21 | 2.1Diesel | | OB0006 | 0986B00006 | | | DB0694 | 0986450694 | | |
| RENAULT | Rodeo | 2.0-2.2 | | OB0006 | 0986B00006 | AB9603 | 1987429603 | GB0008 | 0986BF0008 | | |
| RENAULT | Rodeo | 2.1Diesel | | OB0006 | 0986B00006 | | | DB0694 | 0986450694 | | |
| RENAULT | Sandero/Stepway 1.6 16v | K4M-706 | 02.08 => | OB3332 | 0451103332 | AB2333 | 0986B02333 | GB0024 | 0986BF0024 | CB0581 | 0986BF0581 |

| MARCA | VEHÍCULO | MOTOR | FECHA | SC | ACEITE | SC | AIRE | SC | COMBUSTIBLE | SC | HABITÁCULO |
|---|---|---|---|---|---|---|---|---|---|---|---|
| RENAULT | Sandero/Stepway 1.5 dCi | K9K-700 | 02.08 => | OB3332 | 0451103332 | AB2506 | 0986B02506 | N2019 | F026402019 | CB0581 | 0986BF0581 |
| RENAULT | Sandero 1.6 8v | K7M-710 | 05.09 =>05.15 | OB3332 | 0451103332 | AB2052 | 0986B02052 | GB0024 | 0986BF0024 | CB0581 | 0986BF0581 |
| RENAULT | Sandero 1.6 8v | K7M-710 | 05.15 => | OB3332 | 0451103332 | AB2382 | 0986B02382 | GB0024 | 0986BF0024 | CB0581 | 0986BF0581 |
| RENAULT | Scenic | 1.6i | | OB3332 | 0451103332 | AB9603 | 1987429603 | GB0024 | 0986BF0024 | CB0565 | 0986BF0565 |
| RENAULT | Scenic I | 1.9TD(F9Q) | 02.98 =>10/01 | OB0056 | 0986B00056 | AB2021 | 0986B02021 | DB0205 | 0986BF0205 | CB0565 | 0986BF0565 |
| RENAULT | Scenic I | 1.9Dti F9Q-731/736 | 09.99 =>07/01 | OB3332 | 0451103332 | AB2342 | 0986B02342 | DB0205 | 0986BF0205 | A538 | 1987432069 |
| RENAULT | | | | | | | | DB0208 | 0986BF0208 | | |
| RENAULT | Scenic I | 1.9RNTD,RTTD,RXETDF9Q-736 | 09.99=> | OB3332 | 0451103332 | AB2342 | 0986B02342 | DB0205 | 0986BF0205 | CB0550 | 0986BF0550 |
| RENAULT | Scenic | 2.0i | | OB3332 | 0451103332 | | | GB0024 | 0986BF0024 | CB0565 | 0986BF0565 |
| RENAULT | Scenic II | 1.6i16v | | OB3332 | 0451103332 | AB2333 | 0986B02333 | GB0024 | 0986BF0024 | A538 | 1987432069 |
| RENAULT | Scenic II 1.5 DCI | K9K-722 | 04.03 => 06.05 | OB3332 | 0451103332 | S0441 | F026400441 | N6469 | 0450906469 | | |
| RENAULT | Scenic II 1.5 DCI | K9K | 04.03 => 06.05 | OB3332 | 0451103332 | S0441 | F026400441 | N6469 | 0450906469 | | |
| RENAULT | Scenic II 2.0 16v | F4R-770/1 | 04.03 => | OB3332 | 0451103332 | S0441 | F026400441 | GB0024 | 0986BF0024 | A538 | 1987432069 |
| RENAULT | Symbol 1.6 16v | K4M-706 | 01.09 => | OB3332 | 0451103332 | AB2333 | 0986B02333 | GB0024 | 0986BF0024 | | Nolleva |
| RENAULT | Symbol 1.6 8v | K7M | 01.09 => | OB3332 | 0451103332 | AB2052 | 0986B02052 | GB0024 | 0986BF0024 | | |
| RENAULT | Symbol 1.5 DCI | K9K-700 | 01.09 => | OB3332 | 0451103332 | AB2506 | 0986B02506 | N2019 | F026402019 | | |
| RENAULT | Trafic | 1.4-1.6 | => 89 | OB0035 | 0986B00035 | AB9603 | 1987429603 | GB0008 | 0986BF0008 | | |
| RENAULT | Trafic | 1.6 | 90 => | OB0036 | 0986B00036 | AB9603 | 1987429603 | GB0008 | 0986BF0008 | | |
| RENAULT | Trafic | 1.9D | 02.98 => | OB0056 | 0986B00056 | | | DB0205 | 0986BF0205 | | |
| RENAULT | Trafic | 2.0-2.2 | | | | AB9603 | 1987429603 | GB0008 | 0986BF0008 | | |
| RENAULT | Trafic | 2.1Diesel | | OB0006 | 0986B00006 | | | DB0694 | 0986450694 | | |
| RENAULT | Twingo | 1.2iC3G | => 97 | OB3332 | 0451103332 | S3623 | 1457433623 | GB0024 | 0986BF0024 | | |
| RENAULT | Twingo 1.1 | D7F-700 | 98 => 03-00 | OB0023 | 0986B00023 | | | GB0024 | 0986BF0024 | | |
| RENAULT | Twingo | 1.2iD7F700/701/702/703/704/706 | 04-00 => 02-03 | OB3332 | 0451103332 | S3623 | 1457433623 | GB0024 | 0986BF0024 | | |
| RENAULT | Twingo | 1.2iD7F700/701/702/703/704/706/708 | 03-03 => | OB0513 | 0986B00513 | AB2331 | 0986B02331 | GB0024 | 0986BF0024 | | |
| RENAULT | Twingo | 1.2i16vD4F702/704 | => 02.03 | OB0701 | 0986B00701 | AB2331 | 0986B02331 | GB0024 | 0986BF0024 | | |
| RENAULT | Twingo | 1.2i16vD4F702/704/708 | 03-03 => | OB0513 | 0986B00513 | AB2331 | 0986B02331 | GB0024 | 0986BF0024 | | |
| RENAULT | Camiones | | | | | | | | | | |
| RENAULT | | | | | | | | | | | |
| RENAULT | 440.18 E .Tech - Magnum | MIDR06.24.65B-12.0TD | | OB1018 | 0986B01018 | | | N4421 | 1457434421 | | |
| RENAULT | 440.18 E .Tech - Magnum | | | HB1652(DH) | 0986B01652 | | | | | | |
| RENAULT | 440.19 E Tech - Magnum | BT4x2Z1 | 01.00 => | P4010 | 0451104010 | S0145 | F026400145 | N4421 | 1457434421 | | |
| RENAULT | | | | HB1652(DH) | 0986B01652 | | | | | | |
| RENAULT | AE 420 Magnum | MIDR06.35.40 | 10.92 => 12.96 | P4010 | 0451104010 | | | N4154 | 1457434154 | | |
| RENAULT | AE 420 Magnum | | | HB1652(DH) | 0986B01652 | | | | | | |
| RENAULT | AE 430 Magnum | MIDR06.24.65B/42-12.0TD | 10.90 =>05.00 | OB1018 | 0986B01018 | | | DB0519 | 0986450519 | | |
| RENAULT | AE 430 Magnum | | | HB1652(DH) | 0986B01652 | | | | | | |
| RENAULT | AE 420 Ti Magnum | MIDR06.35.40M3-12.0D | 10.90 =>05.00 | OB1018 | 0986B01018 | | | DB0519 | 0986450519 | | |
| RENAULT | AE 420 Ti Magnum | | | HB1652(DH) | 0986B01652 | | | | | | |

| MARCA | VEHÍCULO | MOTOR | FECHA | SC | ACEITE | SC | AIRE | SC | COMBUSTIBLE | SC | HABITÁCULO |
|---|---|---|---|---|---|---|---|---|---|---|---|
| RENAULT | AE 440 E-Tech Magnum | 06.24.65B46 | 02.00 => 05.05 | P4010 | 0451104010 | S0145 | F026400145 | N4154 | 1457434154 | | |
| RENAULT | | | | HB1652(DH) | 0986B01652 | | | | | | |
| RENAULT | CBH 320 - 385 | MIDR06.35.40M3-12.0D | 10.90 =>05.00 | OB1018 | 0986B01018 | | | DB0519 | 0986450519 | | |
| RENAULT | CBH 320 - 385 | | | HB1652(DH) | 0986B01652 | | | | | | |
| RENAULT | G 300 - G 340 | MIRD6.20.45-9.8D | 10.90 =>05.00 | OB1018 | 0986B01018 | | | DB0519 | 0986450519 | | |
| RENAULT | G 300 - G 340 | | | HB1652(DH) | 0986B01652 | | | | | | |
| RENAULT | Kerax 300 - 385 - 420 cDi | MIDR6.20.45/6.23.56 | | OB1018 | 0986B01018 | | | DB0519 | 0986450519 | | |
| RENAULT | Kerax 300 - 385 - 420 cDi | | | HB1652(DH) | 0986B01652 | | | | | | |
| RENAULT | Kerax 380 Dxi | DXi11 | 04.09 => | OB1020(S) | 0986B01020 | S0527 | F026400527 | N2017 | F026402017 | | |
| RENAULT | Kerax 380 Dxi | | | HB1652(DH) | 0986B01652 | | | | | | |
| RENAULT | Kerax 420 Dci | dci11420 | 11.01 => | P7060 P4010 | F026407060/0451104010 | S0527 | F026400527 | N4421 | 1457434421 | | |
| RENAULT | Kerax 420 Dci | | | HB1652(DH) | 0986B01652 | | | | | | |
| RENAULT | Manager G 300 | MIDR06.20.45 | 01.90 => 09.96 | P4010 | 0451104010 | | | N4154 | 1457434154 | | |
| RENAULT | Manager G 300 | | | OB1018 | 0986B01018 | | | DB0519 | 0986450519 | | |
| RENAULT | | | | HB1652(DH) | 0986B01652 | | | | | | |
| RENAULT | Manager G 300 | | 10.90 =>05.00 | | | | | N4421(S) | 1457434421 | | |
| RENAULT | Midliner ME 160 - M 210 - M/ MS 230 | MIDR6.2.26 | 01.92 =>05.00 | OB1018 | 0986B01018 | AB3513(P) | 0986B03513 | DB0519 | 0986450519 | | |
| RENAULT | Midliner ME 160 - M 210 - M/ MS 230 | MIDR6.2.26 | 05.95 => 05.00 | HB1652(DH) | 0986B01652 | AB3905(S) | 0986B03905 | | | | |
| RENAULT | Midliner ME 160 | MIDR06.02.12B | 05.92 => 05.00 | P4010 | 0451104010 | AB3513(P) | 0986B03513 | N4154 | 1457434154 | | |
| RENAULT | Midliner ME 160 | | | HB1652(DH) | 0986B01652 | AB3905(S) | 0986B03905 | | | | |
| RENAULT | Midliner M 210 | MIDR06.02.26W | 05.92 => 05.00 | P4010 | 0451104010 | AB3513(P) | 0986B03513 | N4154 | 1457434154 | | |
| RENAULT | Midliner M 210 | | | HB1652(DH) | 0986B01652 | AB3905(S) | 0986B03905 | | | | |
| RENAULT | Midliner M 230 | MIDR06.02.26 | 05.92 => 05.00 | P4010 | 0451104010 | AB3513(P) | 0986B03513 | N4154 | 1457434154 | | |
| RENAULT | Midliner M 230 | | | HB1652(DH) | 0986B01652 | AB3905(S) | 0986B03905 | | | | |
| RENAULT | Midlum 150 - 270 dCi | MIDR04.02.26-4.0 | | OB1018 | 0986B01018 | | | DB0519 | 0986450519 | | |
| RENAULT | Midlum 150 - 270 dCi | | | HB1652(DH) | 0986B01652 | | | N4421(S) | 1457434421 | | |
| RENAULT | Midlum 18 - 270 dCi | dci6-270 | 11.01 => 05.06 | P4010 | 0451104010 | S0145 | F026400145 | N4421 | 1457434421 | | |
| RENAULT | Midlum 18 - 270 dCi | | | Z4006 (DH) | F026404006 | Z8250(Secador) | 0986628250 | | | | |
| RENAULT | | | | HB1652(DH) | 0986B01652 | | | | | | |
| RENAULT | Premium HR 340 | MIDR06.20.45 | 04.96 => 12.01 | P4010 | 0451104010 | S0527 | F026400527 | N4154 | 1457434154 | | |
| RENAULT | Premium HR 340 | | | HB1652(DH) | 0986B01652 | | | | | | |
| RENAULT | Premium HR 385 | MIDR06.23.56 | 04.96 => 12.01 | P4010 | 0451104010 | S0527 | F026400527 | N4154 | 1457434154 | | |
| RENAULT | Premium HR 385 | | | HB1652(DH) | 0986B01652 | | | | | | |
| RENAULT | Premium 300 - 340 - 385 - 420 | MIDR06.20.45/56-9.8D | | OB1018 | 0986B01018 | | | DB0519(P) | 0986450519 | | |
| RENAULT | Premium 300 - 340 - 385 - 420 | | | HB1652(DH) | 0986B01652 | | | N4421(S) | 1457434421 | | |
| RENAULT | Premium HD 370 DXi | DXi11Euro4/5 | 05.06 => | P7060 P4010 | F026407060/0451104010 | S0145 | F026400145 | N4421 | 1457434421 | | |
| RENAULT | Premium HD 370 DXi | | | (DH)Z4006 | F026404006 | Z8250(Secador) | 0986628250 | | | | |
| RENAULT | Premium HD 370 DXi | | | HB1652(DH) | 0986B01652 | | | | | | |
| RENAULT | Premium HR 420 DCi | DCi11B/43 | 05.00 => 05.06 | P7060 P4010 | F026407060/0451104010 | S0145 | F026400145 | N4421 | 1457434421 | | |

| MARCA | VEHÍCULO | MOTOR | FECHA | SC | ACEITE | SC | AIRE | SC | COMBUSTIBLE | SC | HABITÁCULO |
|---|---|---|---|---|---|---|---|---|---|---|---|
| RENAULT | Premium HR 420 DCi | | | (DH)Z4006 | F026404006 | Z8250(Secador) | 0986628250 | | | | |
| RENAULT | | | | HB1652(DH) | 0986B01652 | | | | | | |
| RENAULT | Premium HL 420 DCi | DCi11B/43 | 02.04 => | P7060 P4010 | F026407060/0451104010 | S0145 | F026400145 | N4421 | 1457434421 | | |
| RENAULT | Premium HL 420 DCi | | | (DH)Z4006 | F026404006 | Z8250(Secador) | 0986628250 | | | | |
| RENAULT | | | | HB1652(DH) | 0986B01652 | | | | | | |
| RENAULT | Premium Authentic 320 dci | | 01.05 => | P4010 | 0451104010 | S0145 | F026400145 | N4421 | 1457434421 | | |
| RENAULT | Premium Authentic 320 dci | | | HB1652(DH) | 0986B01652 | | | | | | |
| RENAULT | Exclusive 370 dci | | 01.05 => | P4010 | 0451104010 | S0145 | F026400145 | N4421 | 1457434421 | | |
| RENAULT | Exclusive 370 dci | | | HB1652(DH) | 0986B01652 | | | | | | |
| RENAULT | Premium F1 Team | | 01.05 => | P4010 | 0451104010 | S0527 | F026400527 | | | | |
| RENAULT | Premium F1 Team | | | HB1652(DH) | 0986B01652 | | | | | | |
| ROVER | | | | | | | | | | | |
| ROVER | 25 | 1.6i16v | 02-00 => | P4026 | 0451104026 | | | | | | |
| ROVER | 25 | 1.8i16v | 02-00 => | P4026 | 0451104026 | | | | | | |
| ROVER | 25 | 1.8i16v | 02-00 => | P4026 | 0451104026 | | | | | | |
| ROVER | 25 | 2.0TurboDiesel | 02-00 => | P3341 | 0451103341 | AB2336 | 0986B02336 | DB0851 | 0986450851 | | |
| ROVER | 45 | 1.4i16v | 02-00 => | OB2354 | 0986452354 | AB2336 | 0986B02336 | | | | |
| ROVER | 45 | 1.6i16v | 02-00 => | P4026 | 0451104026 | AB2336 | 0986B02336 | | | | |
| ROVER | 45 | 1.8i16v | 02-00 => | P4026 | 0451104026 | AB2336 | 0986B02336 | | | | |
| ROVER | 45 | 2.0iV6 24v | 02-00 => | | | AB2336 | 0986B02336 | | | | |
| ROVER | 45 | 2.0TurboDiesel | 02-00 => | P3341 | 0451103341 | AB2336 | 0986B02336 | DB0851 | 0986450851 | CB0519 | 0986BF0519 |
| ROVER | 75 2.0 V6 | KV6 | 04.99 => | P9119 | 1457429119 | S3588 | 1457433588 | N4187 | 1457434187 | | |
| ROVER | 75 | 2.0 Diesel | 01-99 => | P9119 | 1457429119 | | | N4187 | 1457434187 | | |
| ROVER | 75 | 2.0TDITurboDiesel | | P9119 | 1457429119 | S3588 | 1457433588 | N4187 | 1457434187 | | |
| ROVER | 214 | 1.4i | 05-92 => | P4026 | 0451104026 | | | | | | |
| ROVER | 216 | 1.6i | 10-95 => | P4026 | 0451104026 | | | | | CB0519 | 0986BF0519 |
| ROVER | 216 | 1.6i16V-HONDA | 10-89 => 2-96 | OB2354 | 0986452354 | | | | | | |
| ROVER | 220 | 2.0Diesel | 9-91 => 6-96 | P4026 | 0451104026 | | | | | | |
| ROVER | 220 | 2.0Coupe | | P3311 | 0451103311 | | | | | | |
| ROVER | 414 | 1.6i | | P4026 | 0451104026 | | | | | M2053 | 1987432053 |
| ROVER | 416 | 1.6i | 04-96 => | P4026 | 0451104026 | AB2336 | 0986B02336 | | | CB0519 | 0986BF0519 |
| ROVER | 416 | 1.6i16V-HONDA | | OB2354 | 0986452354 | | | | | M2053 | 1987432053 |
| ROVER | 420 | 2.0Diesel | | P3341 | 0451103341 | AB2336 | 0986B02336 | DB0851 | 0986450851 | M2053 | 1987432053 |
| ROVER | 420 | 2.0TurboDiesel | | | | AB2336 | 0986B02336 | DB0851 | 0986450851 | M2053 | 1987432053 |
| ROVER | 420 Di/SDi/ | 2.0i | | P3311 | 0451103311 | AB2336 | 0986B02336 | DB0851 | 0986450851 | M2053 | 1987432053 |
| ROVER | 420 | 2.0i16V | | P4026 | 0451104026 | AB2336 | 0986B02336 | | | M2053 | 1987432053 |
| ROVER | 620 | 2.0Diesel | | P3311 | 0451103311 | AB2336 | 0986B02336 | DB0851 | 0986450851 | | |
| ROVER | 820 | 2.0i | | P4026 | 0451104026 | | | F5021 | 0450905021 | | |
| ROVER | 820 | 2.0i | | P3311 | 0451103311 | | | F5095 | 0450905095 | | |

| MARCA | VEHÍCULO | MOTOR | FECHA | SC | ACEITE | SC | AIRE | SC | COMBUSTIBLE | SC | HABITÁCULO |
|---|---|---|---|---|---|---|---|---|---|---|---|
| ROVER | Land Rover Defender | 2.5TD5 | 09.90 => 09.95 | OB0057 | 0986B00057 | | | N4329 | 1457434329 | | |
| ROVER | Land Rover Defender 90 TDi - 110 TDi | 2.5DTurbo | => 09.95 | OB0057 | 0986B00057 | | | DB0732 | 0986450732 | | |
| ROVER | Land Rover Defender 90 TDi - 110 TDi | 2.5DTurbo | 10-95 => | OB1026 | 0986B01026 | | | DB0732 | 0986450732 | | |
| ROVER | Land Rover Defender 300 TDi | | | OB1026 | 0986B01026 | | | DB0732 | 0986450732 | | |
| ROVER | Land Rover Discovery I | 2.5Tdi | 96=>99 | OB0057 | 0986B00057 | | | DB0732 | 0986450732 | | |
| ROVER | Land Rover Discovery II | 4.0V8 | 98=>04 | OB0057 | 0986B00057 | | | | | | |
| ROVER | Land Rover Discovery III | 2.7V6 24vTurboDiesel | 05 => | | | | | | | | |
| ROVER | Land Rover Discovery III | 4.4iV832v | 05 => | | | | | | | | |
| ROVER | Land Rover Freelander | 1.8i16V | 03.01=>09.02 | P4026 | 0451104026 | AB2336 | 0986B02336 | | | | |
| ROVER | Land Rover Freelander | 2.016vTurboDiesel | 01 => | P9119 | 1457429119 | S3588 | 1457433588 | DB0851 | 0986450851 | | |
| ROVER | Land Rover Freelander | 2.016vTurboDiesel | | P3341 | 0451103341 | AB2336 | 0986B02336 | DB0851 | 0986450851 | | |
| ROVER | Land Rover Freelander | 2.5iV6 24v | 01 => | P4026 | 0451104026 | | | | | | |
| ROVER | Land Rover Freelander II | 2.2TD4(DW12BETD4) | 01.08=> | OB0705 | 0986B00705 | | | | | | |
| ROVER | MGF | 1.8i16v | | P4026 | 0451104026 | | | | | | |
| ROVER | MGF | 1.8i16vVVC | | P4026 | 0451104026 | | | | | | |
| ROVER | MGF | 1.8 16v | | P4026 | 0451104026 | | | | | | |
| ROVER | Mini Cooper | 1.6 16v | 04 => | | | | | | | | |
| ROVER | Range Rover | 2.7V6 24vTurboDiesel | 05 => | | | | | | | | |
| ROVER | Range Rover | 4.4iV832v | 05 => | | | | | | | | |
| ROVER | Range Rover Tdi | 2.5VM-DieselTurbo | | OB3325 | 0451103325 | | | DB0732 | 0986450732 | | |
| ROVER | Range Rover TD6 3.0 | M57D30 | 03.02 => 12.06 | P9118 | 1457429118 | | | | | | |
| ROVER | Range Rover SE | 4.0iV8 | | OB0057 | 0986B00057 | | | GB0234 | 0986450234 | | |
| ROVER | Range Rover HSE | 4.6i-16v | 97 => 03 | OB0057 | 0986B00057 | | | GB0234 | 0986450234 | | |
| SAAB | | | | | | | | | | | |
| SAAB | 9-3 | 2.0iTurbo | 01 => | P7005 | F026407005 | S3263 | 1457433263 | | | | |
| SAAB | 9-3 | 2.2TurboDiesel | 01 => | P7002 | 1457437002 | | | | | | |
| SAAB | 9-5 | 2.0iTurbo | | P7005 | F026407005 | | | | | | |
| SAAB | 9-5 | 2.3i | | P7005 | F026407005 | | | | | | |
| SAAB | 9-5 | 2.3iTurbo | | P7005 | F026407005 | | | | | | |
| SAAB | 9-5 | 3.0iV6 24v | | P7005 | F026407005 | | | | | | |
| SAAB | 900 | 2.0i | | P7005 | F026407005 | S3263 | 1457433263 | | | | |
| SAAB | 900 | 2.0iTurbo | | P7005 | F026407005 | S3263 | 1457433263 | | | | |
| SAAB | 900 | 2.3i | | P7005 | F026407005 | S3263 | 1457433263 | | | | |
| SAAB | 9000 | 2.0i | | P7005 | F026407005 | S9839 | 1457429839 | | | | |
| SAAB | 9000 | 2.3iTurbo | | P7005 | F026407005 | S9839 | 1457429839 | | | | |
| SAAB | 9000 | 3.0iV6 24v | | OB0021 | 0986B00021 | S9839 | 1457429839 | | | | |
| SAAB | 9000 | 3.0iV6 24v | | OB0021 | 0986B00021 | S9839 | 1457429839 | | | | |
| SCANIA | Camiones - Omnibus | | | | | | | | | | |
| SCANIA | Serie BR | | | | | | | | | | |

| MARCA | VEHÍCULO | MOTOR | FECHA | SC | ACEITE | SC | AIRE | SC | COMBUSTIBLE | SC | HABITÁCULO |
|---|---|---|---|---|---|---|---|---|---|---|---|
| SCANIA | BR 116 | h.chasis 24000411-DS11 | | OB1003 | 0986B01003 | AB3515(P) | 0986B03515 | DB0519 | 0986450519 | | |
| SCANIA | BR 116 | h.chasis 24000411-DS11 | | HB1652(DH) | 0986B01652 | | | | | | |
| SCANIA | BR 116 | d.chasis 24000412-DN11 | | OB1003 | 0986B01003 | | | DB0519 | 0986450519 | | |
| SCANIA | BR 116 | d.chasis 24000412-DN11 | | HB1652(DH) | 0986B01652 | | | | | | |
| SCANIA | Serie F | | | | | | | | | | |
| SCANIA | F 94 | DSC9.11 | 98 => | OB1018 | 0986B01018 | AB2283(P) | 1457432283 | DB0237 | 0986BF0237 | | |
| SCANIA | | | | HB1652(DH) | 0986B01652 | | | | | | |
| SCANIA | | | | OB1004(TR) | 0986B01004 | | | DB0715 | 0986450715 | | |
| SCANIA | | | | | | | | DB0734(BoxSA) | 0986450734 | | |
| SCANIA | | | | | | | | DB0222(Elem.SA) | 0986BF0222 | | |
| SCANIA | | | | | | | | DB0232 | 0986BF0232 | | |
| SCANIA | | | | | | | | RB0583(SR) | 0986450583 | | |
| SCANIA | K 94 -L 94 | DSC9-15 | 98 => | OB1018 | 0986B01018 | AB3540(P) | 0986B03540 | DB0715 | 0986450715 | | |
| SCANIA | | | | HB1652(DH) | 0986B01652 | | | DB0734(BoxSA) | 0986450734 | | |
| SCANIA | | | | OB1004(TR) | 0986B01004 | | | DB0222(Elem.SA) | 0986BF0222 | | |
| SCANIA | | | | | | | | DB0232 | 0986BF0232 | | |
| SCANIA | | | | | | | | RB0583(SR) | 0986450583 | | |
| SCANIA | F 113 | DSC11.78 | 92 => 96 | OB1003 | 0986B01003 | AB3515(P) | 0986B03515 | DB0519 | 0986450519 | | |
| SCANIA | F 113 | DSC11.78 | | HB1652(DH) | 0986B01652 | | | RB0581(SR) | 0986450581 | | |
| SCANIA | | | | OB1004(TR) | 0986B01004 | | | DB0701(SA) | 0986450701 | | |
| SCANIA | F 113 HL - L 113 HL/CL | DS11.78-DS11.75 | 97 => | OB1003 | 0986B01003 | AB3515(P) | 0986B03515 | DB0519 | 0986450519 | | |
| SCANIA | F 113 HL - L 113 HL/CL | DS11.78-DS11.75 | | HB1652(DH) | 0986B01652 | | | DB0701(SA) | 0986450701 | | |
| SCANIA | | | | OB1004(TR) | 0986B01004 | | | RB0581 (SR) | 0986450581 | | |
| SCANIA | Serie G | | | | | | | | | | |
| SCANIA | G-310 | DC918-310 | 10.07 => | OB1018 | 0986B01018 | AB3010 | 0986B03010 | DB0212(Elem.SA) | 0986BF0212 | | |
| SCANIA | | | | HB1652(DH) | 0986B01652 | S3042 | 1457433042 | | | | |
| SCANIA | | | | | | | | | | | |
| SCANIA | | | | | | | | | | | |
| SCANIA | G-340 | DC12-10 | 09.07 => | OB1018 | 0986B01018 | AB3010 | 0986B03010 | DB0250 | 0986BF0250 | | |
| SCANIA | | | | HB1652(DH) | 0986B01652 | S3042 | 1457433042 | DB0212(Elem.SA) | 0986BF0212 | | |
| SCANIA | G-380 | DC12-17 | 11.06 => | OB1018 | 0986B01018 | AB2284(P) | 1457432284 | DB0237 | 0986BF0237 | | |
| SCANIA | | | | OB1004(TR) | 0986B01004 | | | | | | |
| SCANIA | | | | | | | | DB0708(BoxSA) | 0986450708 | | |
| SCANIA | | | | | | | | DB0221(Elem.SA) | 0986BF0221 | | |
| SCANIA | | | | | | | | DB0212(Elem.SA) | 0986BF0212 | | |
| SCANIA | | | | | | | | RB0583(SR) | 0986450583 | | |
| SCANIA | G-380 | DC12-17EuroIII | 01.08 => | | | AB3010 | 0986B03010 | DB0250 | 0986BF0250 | | |
| SCANIA | | | | HB1652(DH) | 0986B01652 | | | DB0708(BoxSA) | 0986450708 | | |
| SCANIA | | | | OB1004(TR) | 0986B01004 | | | DB0221(Elem.SA) | 0986BF0221 | | |

| MARCA | VEHÍCULO | MOTOR | FECHA | SC | ACEITE | SC | AIRE | SC | COMBUSTIBLE | SC | HABITÁCULO |
|---|---|---|---|---|---|---|---|---|---|---|---|
| SCANIA | | | | | | | | RB0583(SR) | 0986450583 | | |
| SCANIA | G-420 | DC12-06EuroIII | 11.06 => | OB1018 | 0986B01018 | AB2284(P) | 1457432284 | DB0237 | 0986BF0237 | | |
| SCANIA | | | | OB1004(TR) | 0986B01004 | | | | | | |
| SCANIA | | | | | | | | DB0708(BoxSA) | 0986450708 | | |
| SCANIA | | | | | | | | DB0221(Elem.SA) | 0986BF0221 | | |
| SCANIA | | | | | | | | DB0212(Elem.SA) | 0986BF0212 | | |
| SCANIA | | | | | | | | RB0583(SR) | 0986450583 | | |
| SCANIA | G-420 | DC12-06EuroIII | 01.08 => | | | AB3010 | 0986B03010 | DB0250 | 0986BF0250 | | |
| SCANIA | | | | HB1652(DH) | 0986B01652 | | | DB0708(BoxSA) | 0986450708 | | |
| SCANIA | | | | OB1004(TR) | 0986B01004 | | | DB0221(Elem.SA) | 0986BF0221 | | |
| SCANIA | | | | | | | | RB0583(SR) | 0986450583 | | |
| SCANIA | G-440 | DT12-18EuroIII | 11.06 => | | | AB3010 | 0986B03010 | DB0250 | 0986BF0250 | | |
| SCANIA | | | | HB1652(DH) | 0986B01652 | | | DB0708(BoxSA) | 0986450708 | | |
| SCANIA | | | | OB1004(TR) | 0986B01004 | | | DB0221(Elem.SA) | 0986BF0221 | | |
| SCANIA | | | | | | | | RB0583(SR) | 0986450583 | | |
| SCANIA | G-470 | DT12-06 | 11.06 => | OB1018 | 0986B01018 | AB2284(P) | 1457432284 | DB0237 | 0986BF0237 | | |
| SCANIA | | | | OB1004(TR) | 0986B01004 | | | | | | |
| SCANIA | | | | | | | | DB0708(BoxSA) | 0986450708 | | |
| SCANIA | | | | | | | | DB0221(Elem.SA) | 0986BF0221 | | |
| SCANIA | | | | | | | | DB0212(Elem.SA) | 0986BF0212 | | |
| SCANIA | | | | | | | | RB0583(SR) | 0986450583 | | |
| SCANIA | Serie K | | | | | | | | | | |
| SCANIA | K 112 | DSC11 | => 91 | OB1003 | 0986B01003 | | | DB0519 | 0986450519 | | |
| SCANIA | K 112 | DSC11 | | HB1652(DH) | 0986B01652 | | | DB0701(SA) | 0986450701 | | |
| SCANIA | | | | OB1004(TR) | 0986B01004 | | | RB0581 (SR) | 0986450581 | | |
| SCANIA | K 112 | DSC11 | 92 => | OB1003 | 0986B01003 | AB3515(P) | 0986B03515 | DB0519 | 0986450519 | | |
| SCANIA | K 112 | DSC11 | | HB1652(DH) | 0986B01652 | | | DB0701(SA) | 0986450701 | | |
| SCANIA | | | | OB1004(TR) | 0986B01004 | | | RB0581 (SR) | 0986450581 | | |
| SCANIA | K 113 | | 92 => 96 | OB1003 | 0986B01003 | | | DB0519 | 0986450519 | | |
| SCANIA | K 113 | | | HB1652(DH) | 0986B01652 | | | DB0701(SA) | 0986450701 | | |
| SCANIA | | | | OB1004(TR) | 0986B01004 | | | RB0581 (SR) | 0986450581 | | |
| SCANIA | K 113 CL - K 113 TL | DSC11.21-DSC11.23 | 97 => | OB1003 | 0986B01003 | | | DB0519 | 0986450519 | | |
| SCANIA | K 113 CL - K 113 TL | DSC11.21-DSC11.23 | | HB1652(DH) | 0986B01652 | | | DB0701(SA) | 0986450701 | | |
| SCANIA | | | | OB1004(TR) | 0986B01004 | | | RB0581 (SR) | 0986450581 | | |
| SCANIA | K 124 | DSC12.02-DSC12.05 | 98 => | OB1018 | 0986B01018 | AB3540(P) | 0986B03540 | DB0715 | 0986450715 | | |
| SCANIA | K 124 | DSC12.02-DSC12.05 | | HB1652(DH) | 0986B01652 | AB3010 | 0986B03010 | DB0734(BoxSA) | 0986450734 | | |
| SCANIA | | | | OB1004(TR) | 0986B01004 | | | RB0583(SR) | 0986450583 | | |
| SCANIA | K 124 | DC1210340(Euro4)//DC1213380 | 11.05 => | OB1018 | 0986B01018 | S0327 | F026400327 | | | | |
| SCANIA | | | | HB1652(DH) | 0986B01652 | | | | | | |

| MARCA | VEHÍCULO | MOTOR | FECHA | SC | ACEITE | SC | AIRE | SC | COMBUSTIBLE | SC | HABITÁCULO |
|---|---|---|---|---|---|---|---|---|---|---|---|
| SCANIA | K-310 | DC9-21 | 01.05 => | OB1018 | 0986B01018 | AB3010 | 0986B03010 | DB0250 | 0986BF0250 | | |
| SCANIA | | | | HB1652(DH) | 0986B01652 | | | DB0212(Elem.SA) | 0986BF0212 | | |
| SCANIA | | | | OB1004(TR) | 0986B01004 | | | RB0583(SR) | 0986450583 | | |
| SCANIA | K-340 | DC11-03 | 01.05 => | OB1018 | 0986B01018 | AB3010 | 0986B03010 | | | | |
| SCANIA | | | | HB1652(DH) | 0986B01652 | | | DB0212(Elem.SA) | 0986BF0212 | | |
| SCANIA | | | | OB1004(TR) | 0986B01004 | | | RB0583(SR) | 0986450583 | | |
| SCANIA | K-380 | DC11-04 | 01.05 => | OB1018 | 0986B01018 | AB3010 | 0986B03010 | | | | |
| SCANIA | | | | HB1652(DH) | 0986B01652 | | | DB0212(Elem.SA) | 0986BF0212 | | |
| SCANIA | | | | OB1004(TR) | 0986B01004 | | | RB0583(SR) | 0986450583 | | |
| SCANIA | K-420 | DSC12-01 | 01.05 => | OB1018 | 0986B01018 | AB3010 | 0986B03010 | | | | |
| SCANIA | | | | HB1652(DH) | 0986B01652 | | | DB0212(Elem.SA) | 0986BF0212 | | |
| SCANIA | | | | OB1004(TR) | 0986B01004 | | | RB0583(SR) | 0986450583 | | |
| SCANIA | K-114 | DSC11 | 01.03 => | OB1018 | 0986B01018 | AB3010 | 0986B03010 | DB0237 | 0986BF0237 | | |
| SCANIA | | | | HB1652(DH) | 0986B01652 | | | | | | |
| SCANIA | | | | | | | | DB0734(BoxSA) | 0986450734 | | |
| SCANIA | | | | | | | | DB0222(Elem.SA) | 0986BF0222 | | |
| SCANIA | | | | | | | | RB0583(SR) | 0986450583 | | |
| SCANIA | Serie L | | | | | | | | | | |
| SCANIA | L 111 | DS11 | | OB1003 | 0986B01003 | AB3515(P) | 0986B03515 | DB0519 | 0986450519 | | |
| SCANIA | L 111 | DS11 | | HB1652(DH) | 0986B01652 | | | | | | |
| SCANIA | Serie P // 3 // 4 | | | | | | | | | | |
| SCANIA | P 93 H - 250 | DSC9-07 | => 99 | OB1003 | 0986B01003 | AB3509(P) | 0986B03509 | DB0519 | 0986450519 | | |
| SCANIA | | | | OB1004(TR) | 0986B01004 | | | DB0701(SA) | 0986450701 | | |
| SCANIA | P 93 H - 250 | DSC9-07 | | HB1652(DH) | 0986B01652 | | | RB0581 (SR) | 0986450581 | | |
| SCANIA | P 93 M - 210 | DSC9-07 | => 99 | OB1003 | 0986B01003 | AB3540(P) | 0986B03540 | DB0519 | 0986450519 | | |
| SCANIA | P 93 M - 210 | DSC9-07 | | HB1652(DH) | 0986B01652 | | | DB0701(SA) | 0986450701 | | |
| SCANIA | | | | | | | | RB0581 (SR) | 0986450581 | | |
| SCANIA | P 94 | DCS9.11-DSC9.12-DSC9.13 | 97 => | OB1018 | 0986B01018 | AB2283(P) | 1457432283 | DB0237 | 0986BF0237 | | |
| SCANIA | | | | OB1003 | 0986B01003 | AB2284(P) | 1457432284 | | | | |
| SCANIA | | | | HB1652(DH) | 0986B01652 | | | DB0715 | 0986450715 | | |
| SCANIA | | | | OB1004(TR) | 0986B01004 | | | DB0222(Elem.SA) | 0986BF0222 | | |
| SCANIA | | | | | | | | DB0734(BoxSA) | 0986450734 | | |
| SCANIA | | | | | | | | RB0583(SR) | 0986450583 | | |
| SCANIA | | | | | | | | | | | |
| SCANIA | P 114 - R 114 - T 114 | DSC11.07 | 97 => | OB1018 | 0986B01018 | AB2283(P) | 1457432283 | DB0237 | 0986BF0237 | | |
| SCANIA | | | | OB1003 | 0986B01003 | AB2284(P) | 1457432284 | | | | |
| SCANIA | | | | HB1652(DH) | 0986B01652 | | | DB0715 | 0986450715 | | |
| SCANIA | | | | OB1004(TR) | 0986B01004 | | | DB0222(Elem.SA) | 0986BF0222 | | |
| SCANIA | | | | | | | | DB0734(BoxSA) | 0986450734 | | |

| MARCA | VEHÍCULO | MOTOR | FECHA | SC | ACEITE | SC | AIRE | SC | COMBUSTIBLE | SC | HABITÁCULO |
|---|---|---|---|---|---|---|---|---|---|---|---|
| SCANIA | | | | | | | | RB0583(SR) | 0986450583 | | |
| SCANIA | P 124 - R 124 - T 124 | DSC12.02-DSC12.05 | 97 => | OB1018 | 0986B01018 | AB2283(P) | 1457432283 | DB0237 | 0986BF0237 | | |
| SCANIA | | | | OB1003 | 0986B01003 | AB2284(P) | 1457432284 | | | | |
| SCANIA | | | | HB1652(DH) | 0986B01652 | | | DB0715 | 0986450715 | | |
| SCANIA | | | | OB1004(TR) | 0986B01004 | | | DB0222(Elem.SA) | 0986BF0222 | | |
| SCANIA | | | | | | | | DB0734(BoxSA) | 0986450734 | | |
| SCANIA | | | | | | | | RB0583(SR) | 0986450583 | | |
| SCANIA | P-230 | DC913-230EuroIII | 09.04 => | OB1018 | 0986B01018 | AB3010 | 0986B03010 | DB0237 | 0986BF0237 | M2153 | 1987432153 |
| SCANIA | | | | HB1652(DH) | 0986B01652 | S3042 | 1457433042 | | | | |
| SCANIA | | | | | | | | DB0212(Elem.SA) | 0986BF0212 | | |
| SCANIA | P-270 | DC912-270EuroIII | 09.04 => | OB1018 | 0986B01018 | AB3010 | 0986B03010 | DB0237 | 0986BF0237 | M2153 | 1987432153 |
| SCANIA | | | | HB1652(DH) | 0986B01652 | S3042 | 1457433042 | | | | |
| SCANIA | | | | | | | | DB0212(Elem.SA) | 0986BF0212 | | |
| SCANIA | P-310 | DC911-310EuroIII | 09.04 => | OB1018 | 0986B01018 | AB3010 | 0986B03010 | DB0237 | 0986BF0237 | M2153 | 1987432153 |
| SCANIA | | | | HB1652(DH) | 0986B01652 | S3042 | 1457433042 | | | | |
| SCANIA | | | | | | | | DB0212(Elem.SA) | 0986BF0212 | | |
| SCANIA | P-340 | DC1108.340EuroIII | 09.04 => | OB1018 | 0986B01018 | AB3010 | 0986B03010 | DB0237 | 0986BF0237 | M2153 | 1987432153 |
| SCANIA | | | | HB1652(DH) | 0986B01652 | S3042 | 1457433042 | | | | |
| SCANIA | | | | | | | | DB0212(Elem.SA) | 0986BF0212 | | |
| SCANIA | P-340 | DC1103LA6X2NA | 01.05 => | OB1003 | 0986B01003 | AB2283 | 1457432283 | DB0715 | 0986450715 | M2153 | 1987432153 |
| SCANIA | | | | HB1652(DH) | 0986B01652 | AB2284(P) | 1457432284 | DB0212(Elem.SA) | 0986BF0212 | | |
| SCANIA | | | | OB1004(TR) | 0986B01004 | | | | | | |
| SCANIA | | | | | | | | | | | |
| SCANIA | P-380 | DC1109.380EuroIII | 09.04 => | OB1018 | 0986B01018 | AB3010 | 0986B03010 | DB0237 | 0986BF0237 | M2153 | 1987432153 |
| SCANIA | | | | HB1652(DH) | 0986B01652 | S3042 | 1457433042 | | | | |
| SCANIA | | | | | | | | DB0212(Elem.SA) | 0986BF0212 | | |
| SCANIA | P-420 | DC1214-1420EuroIII | 09.04 => | OB1018 | 0986B01018 | S3042 | 1457433042 | DB0237 | 0986BF0237 | M2153 | 1987432153 |
| SCANIA | | | | HB1652(DH) | 0986B01652 | | | | | | |
| SCANIA | | | | OB1004(TR) | 0986B01004 | | | DB0212(Elem.SA) | 0986BF0212 | | |
| SCANIA | P-420 | DC1206 | 11.06 => | HB1652(DH) | 0986B01652 | AB3010 | 0986B03010 | RB0583(SR) | 0986450583 | | |
| SCANIA | | | | OB1004(TR) | 0986B01004 | S3042 | 1457433042 | | | | |
| SCANIA | Serie R //4 | | | | | | | | | | |
| SCANIA | R 112 H - 310 | DS11 | | OB1003 | 0986B01003 | AB3509(P) | 0986B03509 | DB0519 | 0986450519 | | |
| SCANIA | R 112 H - 310 | DS11 | | HB1652(DH) | 0986B01652 | | | DB0701(SA) | 0986450701 | | |
| SCANIA | | | | | | | | RB0581 (SR) | 0986450581 | | |
| SCANIA | R 112 H - 360 | DSC11 | | OB1003 | 0986B01003 | AB3509(P) | 0986B03509 | DB0519 | 0986450519 | | |
| SCANIA | R 112 H - 360 | DSC11 | | HB1652(DH) | 0986B01652 | | | DB0701(SA) | 0986450701 | | |
| SCANIA | | | | | | | | RB0581 (SR) | 0986450581 | | |
| SCANIA | R 113 H / T 113 H - 310 | DS11 | => 99 | OB1003 | 0986B01003 | AB3509(P) | 0986B03509 | DB0519 | 0986450519 | | |

| MARCA | VEHÍCULO | MOTOR | FECHA | SC | ACEITE | SC | AIRE | SC | COMBUSTIBLE | SC | HABITÁCULO |
|---|---|---|---|---|---|---|---|---|---|---|---|
| SCANIA | R 113 H / T 113 H - 310 | DS11 | | HB1652(DH) | 0986B01652 | | | DB0701(SA) | 0986450701 | | |
| SCANIA | | | | OB1004(TR) | 0986B01004 | | | RB0581 (SR) | 0986450581 | | |
| SCANIA | R 113 H / T 113 E/H - 320 | DSC11 | => 99 | OB1003 | 0986B01003 | AB3509(P) | 0986B03509 | DB0519 | 0986450519 | | |
| SCANIA | R 113 H / T 113 E/H - 320 | DSC11 | | HB1652(DH) | 0986B01652 | | | DB0701(SA) | 0986450701 | | |
| SCANIA | | | | OB1004(TR) | 0986B01004 | | | RB0581 (SR) | 0986450581 | | |
| SCANIA | R 113 H / T 113 E/H - 360 / Top Line | DSC11 | => 99 | OB1003 | 0986B01003 | AB3509(P) | 0986B03509 | DB0519 | 0986450519 | | |
| SCANIA | R 113 H / T 113 E/H - 360 / Top Line | DSC11 | | HB1652(DH) | 0986B01652 | | | DB0701(SA) | 0986450701 | | |
| SCANIA | | | | OB1004(TR) | 0986B01004 | | | RB0581 (SR) | 0986450581 | | |
| SCANIA | R 124 / (Turbo e interc.) | DSC12-02/05 | 01.97 => | OB1018 | 0986B01018 | AB2283 | 1457432283 | DB0237 | 0986BF0237 | M2153 | 1987432153 |
| SCANIA | | | | OB1003 | 0986B01003 | S3042 | 1457433042 | DB0734(BoxSA) | 0986450734 | | |
| SCANIA | | | | HB1652(DH) | 0986B01652 | | | DB0715 | 0986450715 | | |
| SCANIA | R 144 | DSC14 | 01.97 => | OB1018 | 0986B01018 | AB2283 | 1457432283 | DB0715 | 0986450715 | M2153 | 1987432153 |
| SCANIA | | | | OB1003 | 0986B01003 | | | DB0734(BoxSA) | 0986450734 | | |
| SCANIA | | | | HB1652(DH) | 0986B01652 | | | | | | |
| SCANIA | R 164 | DC16-02 | 01.97 => | HB1652(DH) | 0986B01652 | AB2283 | 1457432283 | DB0250 | 0986BF0250 | M2153 | 1987432153 |
| SCANIA | | | | | | | | DB0734(BoxSA) | 0986450734 | | |
| SCANIA | R-380 | DC1109.380EuroIII | 06.04 => | OB1018 | 0986B01018 | AB3010 | 0986B03010 | DB0237 | 0986BF0237 | M2153 | 1987432153 |
| SCANIA | | | | HB1652(DH) | 0986B01652 | S3042 | 1457433042 | | | | |
| SCANIA | | | | | | | | DB0708(BoxSA) | 0986450708 | | |
| SCANIA | | | | | | | | DB0221(Elem.SA) | 0986BF0221 | | |
| SCANIA | | | | | | | | DB0212(Elem.SA) | 0986BF0212 | | |
| SCANIA | | | | | | | | RB0583(SR) | 0986450583 | | |
| SCANIA | R-420 | DC1214-1420EuroIII | 06.04 => | OB1018 | 0986B01018 | S3042 | 1457433042 | DB0237 | 0986BF0237 | M2153 | 1987432153 |
| SCANIA | | | | HB1652(DH) | 0986B01652 | | | | | | |
| SCANIA | | | | OB1004(TR) | 0986B01004 | | | DB0708(BoxSA) | 0986450708 | | |
| SCANIA | | | | | | | | DB0221(Elem.SA) | 0986BF0221 | | |
| SCANIA | | | | | | | | DB0212(Elem.SA) | 0986BF0212 | | |
| SCANIA | | | | | | | | RB0583(SR) | 0986450583 | | |
| SCANIA | R-470 | DT1206-470EuroIII | 06.04 => | OB1018 | 0986B01018 | AB3010 | 0986B03010 | DB0237 | 0986BF0237 | M2153 | 1987432153 |
| SCANIA | | | | HB1652(DH) | 0986B01652 | S3042 | 1457433042 | | | | |
| SCANIA | | | | | | | | DB0708(BoxSA) | 0986450708 | | |
| SCANIA | | | | | | | | DB0221(Elem.SA) | 0986BF0221 | | |
| SCANIA | | | | | | | | DB0212(Elem.SA) | 0986BF0212 | | |
| SCANIA | | | | | | | | RB0583(SR) | 0986450583 | | |
| SCANIA | R-500 | DC1604-500EuroIII | 06.04 => | OB1018 | 0986B01018 | AB2283(P) | 1457432283 | DB0250 | 0986BF0250 | M2153 | 1987432153 |
| SCANIA | | | | HB1652(DH) | 0986B01652 | | | DB0708(BoxSA) | 0986450708 | | |
| SCANIA | | | | | | | | DB0221(Elem.SA) | 0986BF0221 | | |
| SCANIA | | | | | | | | DB0212(Elem.SA) | 0986BF0212 | | |
| SCANIA | R-580 | DC1603-580EuroIII | 02.13 => | | | AB2283 | 1457432283 | DB0250 | 0986BF0250 | M2153 | 1987432153 |

| MARCA | VEHÍCULO | MOTOR | FECHA | SC | ACEITE | SC | AIRE | SC | COMBUSTIBLE | SC | HABITÁCULO |
|---|---|---|---|---|---|---|---|---|---|---|---|
| SCANIA | | | | HB1652(DH) | 0986B01652 | | | DB0212(Elem.SA) | 0986BF0212 | | |
| SCANIA | Serie T // 3 // 4 | | | | | | | | | | |
| SCANIA | T 112 E - 310 | DS11 | | OB1003 | 0986B01003 | AB3509(P) | 0986B03509 | DB0519 | 0986450519 | | |
| SCANIA | T 112 E - 310 | DS11 | | HB1652(DH) | 0986B01652 | | | DB0701(SA) | 0986450701 | | |
| SCANIA | | | | | | | | RB0581(SR) | 0986450581 | | |
| SCANIA | T 112 H - 310 | DS11 | | OB1003 | 0986B01003 | AB3509(P) | 0986B03509 | DB0519 | 0986450519 | | |
| SCANIA | T 112 H - 310 | DS11 | | HB1652(DH) | 0986B01652 | | | DB0701(SA) | 0986450701 | | |
| SCANIA | | | | | | | | RB0581(SR) | 0986450581 | | |
| SCANIA | T 112 E - 320 | DSC11 | | OB1003 | 0986B01003 | AB3509(P) | 0986B03509 | DB0519 | 0986450519 | | |
| SCANIA | T 112 E - 320 | DSC11 | | HB1652(DH) | 0986B01652 | | | DB0701(SA) | 0986450701 | | |
| SCANIA | | | | | | | | RB0581(SR) | 0986450581 | | |
| SCANIA | T 112 H - 360 | DSC11 | | OB1003 | 0986B01003 | AB3509(P) | 0986B03509 | DB0519 | 0986450519 | | |
| SCANIA | T 112 H - 360 | DSC11 | | HB1652(DH) | 0986B01652 | | | DB0701(SA) | 0986450701 | | |
| SCANIA | | | | | | | | RB0581(SR) | 0986450581 | | |
| SCANIA | T 113 | DSC11 | 09.91 => 06.98 | OB1003 | 0986B01003 | AB3509(P) | 0986B03509 | DB0519 | 0986450519 | | |
| SCANIA | | | | HB1652(DH) | 0986B01652 | | | DB0701(SA) | 0986450701 | | |
| SCANIA | | | | OB1004(TR) | 0986B01004 | | | | | | |
| SCANIA | T 124 /Inyecc.Elect./Turbo e Interc. | DSC12-05/02 | 01.98 => | OB1018 | 0986B01018 | AB2283 | 1457432283 | DB0237 | 0986BF0237 | M2153 | 1987432153 |
| SCANIA | | | | OB1003 | 0986B01003 | AB2284 | 1457432284 | DB0734(BoxSA) | 0986450734 | | |
| SCANIA | | | | HB1652(DH) | 0986B01652 | S3042 | 1457433042 | DB0232(SA) | 0986BF0232 | | |
| SCANIA | | | | OB1004(TR) | 0986B01004 | | | | | | |
| SCANIA | T 164 | DC16-02 | 01.97 => | HB1652(DH) | 0986B01652 | AB2283 | 1457432283 | DB0250 | 0986BF0250 | M2153 | 1987432153 |
| SCANIA | | | | | | | | | | | |
| SCANIA | Motor Industrial | DS11-DN11 | | OB1003 | 0986B01003 | AB3515(P) | 0986B03515 | DB0519 | 0986450519 | | |
| SCANIA | | | | | | | | DB0701(SA) | 0986450701 | | |
| SCANIA | Motor Industrial | DSC11.01-DSC11.18 | | OB1003 | 0986B01003 | AB3509(P) | 0986B03509 | DB0519 | 0986450519 | | |
| SCANIA | | | | | | | | DB0701(SA) | 0986450701 | | |
| SEAT | | | | | | | | | | | |
| SEAT | Alhambra | 2.0i | 06-00 => | OB0004 | 0986B00004 | | | F5318 | 0450905318 | A102 | 1987432028 |
| SEAT | Alhambra | 2.0i | => 05.00 | OB0004 | 0986B00004 | S3742 | 1457433742 | F5318 | 0450905318 | A102 | 1987432028 |
| SEAT | Alhambra | 1.9TDi | => 02.00 | OB1038 | 0986B01038 | S3742 | 1457433742 | DB0400 | 0986BF0400 | A102 | 1987432028 |
| SEAT | Alhambra | 1.9TDi | 06-00 => | OB0707 | 0986B00707 | | | | | A102 | 1987432028 |
| SEAT | Alhambra | 1.9Tdi-ASZ | 11-02 => | OB0708 | 0986B00708 | | | | | A102 | 1987432028 |
| SEAT | Altea 2.0 Turbo TFSI | BWA | 05.06 => 09.09 | OB0709 | 0986B00709 | S3102 | 1457433102 | F5959 | 0450905959 | M2097 | 1987432097 |
| SEAT | Altea 2.0 TDI | BKD/BMM | 04.04 => | OB0708 | 0986B00708 | S9404 | 1987429404 | N0008 | 1457070008 | M2097 | 1987432097 |
| SEAT | | | | | | | | N0007 | 1457070007 | | |
| SEAT | Cordoba 1.4i | AEX-AKV-ANX-APQ | => 12.02 | OB0016 | 0986B00016 | AB2018 | 0986B02018 | GB0018 | 0986BF0018 | CB0506 | 0986BF0506 |
| SEAT | Cordoba 1.4i | AKK-ANW-AUD | => 12.02 | OB0016 | 0986B00016 | | | GB0018 | 0986BF0018 | CB0506 | 0986BF0506 |
| SEAT | Cordoba 1.4i 16v | AFH | 09.96 => 06.99 | OB0019 | 0986B00019 | S3716 | 1457433716 | GB0240 | 0986450240 | | |

| MARCA | VEHÍCULO | MOTOR | FECHA | SC | ACEITE | SC | AIRE | SC | COMBUSTIBLE | SC | HABITÁCULO |
|---|---|---|---|---|---|---|---|---|---|---|---|
| SEAT | Cordoba 1.6i | AEE-ALM | => 12.02 | OB0016 | 0986B00016 | AB2018 | 0986B02018 | GB0240 | 0986450240 | CB0506 | 0986BF0506 |
| SEAT | Cordoba | 1.6iAEH-APF-AUR | => 12.02 | OB0004 | 0986B00004 | AB2053 | 0986B02053 | GB0240 | 0986450240 | CB0506 | 0986BF0506 |
| SEAT | Cordoba | 1.6i1F-AFT | => 12.02 | OB0004 | 0986B00004 | AB2311 | 0986B02311 | GB0240 | 0986450240 | CB0506 | 0986BF0506 |
| SEAT | Cordoba | 1.616vBAH | 02.03 => | OB0019 | 0986B00019 | | | F5925 | 0450905925 | | |
| SEAT | Cordoba | 1.8i | | OB0018 | 0986B00018 | AB2311 | 0986B02311 | GB0240 | 0986450240 | CB0506 | 0986BF0506 |
| SEAT | Cordoba | 2.0i AZL-BBX | 04 => | OB0004 | 0986B00004 | AB2332 | 0986B02332 | F5925 | 0450905925 | | |
| SEAT | Cordoba | 2.0i | | OB0018 | 0986B00018 | AB2311 | 0986B02311 | GB0240 | 0986450240 | CB0506 | 0986BF0506 |
| SEAT | Cordoba | 1.9DCLX/GLX | 10.98 => | OB1038 | 0986B01038 | AB2311 | 0986B02311 | N6274 | 0450906274 | | |
| SEAT | Cordoba | 1.9DSE | 01.99 => | OB1038 | 0986B01038 | AB2311 | 0986B02311 | N6409 | 0450906409 | | |
| SEAT | Cordoba | 1.9SDI/TDI | 01.99 => | OB1038 | 0986B01038 | AB2311 | 0986B02311 | N6409 | 0450906409 | | |
| SEAT | Cordoba | 1.9TDCLX/GLX | 01.98 => | OB1038 | 0986B01038 | AB2311 | 0986B02311 | N6274 | 0450906274 | | |
| SEAT | Cordoba | 1.9TDITurboDiesel-ASY-ASZ-ATD | 09-02 => | OB0708 | 0986B00708 | AB2332 | 0986B02332 | N6322 | 0450906322 | | |
| SEAT | Cordoba | 1.9TDITurboDiesel-AHU-1Z | => 12.02 | | | AB2311 | 0986B02311 | DB0400 | 0986BF0400 | CB0506 | 0986BF0506 |
| SEAT | Cordoba | 1.9Diesel-Y1-AEY-AAZ | => 12.02 | OB1038 | 0986B01038 | AB2311 | 0986B02311 | DB0400 | 0986BF0400 | CB0506 | 0986BF0506 |
| SEAT | Cordoba | 1.9TDI-AGR-ALH-ASV | 06-99 => 12-02 | OB0707 | 0986B00707 | AB2053 | 0986B02053 | N6409 | 0450906409 | CB0506 | 0986BF0506 |
| SEAT | Ibiza | 1.0i | 98 => 00 | OB0016 | 0986B00016 | AB2018 | 0986B02018 | GB0240 | 0986450240 | CB0506 | 0986BF0506 |
| SEAT | Ibiza | 1.4i16v | => 02 | | | S3716 | 1457433716 | | | | |
| SEAT | Ibiza | 1.4i | 01 => 03 | OB0016 | 0986B00016 | | | F5925 | 0450905925 | CB0506 | 0986BF0506 |
| SEAT | Ibiza | 1.4i | | OB0016 | 0986B00016 | AB2018 | 0986B02018 | GB0240 | 0986450240 | CB0506 | 0986BF0506 |
| SEAT | Ibiza | 1.6i-100CV | | OB0004 | 0986B00004 | AB2311 | 0986B02311 | GB0240 | 0986450240 | CB0506 | 0986BF0506 |
| SEAT | Ibiza | 1.6i-75CV | | OB0016 | 0986B00016 | AB2018 | 0986B02018 | GB0240 | 0986450240 | CB0506 | 0986BF0506 |
| SEAT | Ibiza | 1.616v APF/AZD | 02.00 => 02.02 | OB0016 | 0986B00016 | AB2324 | 0986B02324 | | | | |
| SEAT | Ibiza | 1.8i | | OB0004 | 0986B00004 | AB2311 | 0986B02311 | GB0240 | 0986450240 | CB0506 | 0986BF0506 |
| SEAT | Ibiza | 1.8i16v | | OB0004 | 0986B00004 | AB2311 | 0986B02311 | GB0240 | 0986450240 | CB0506 | 0986BF0506 |
| SEAT | Ibiza | 1.9D | 01.98 => | OB1038 | 0986B01038 | AB2311 | 0986B02311 | DB0400 | 0986BF0400 | | |
| SEAT | Ibiza | 1.9DSDI | 03.93 => | OB1038 | 0986B01038 | AB2311 | 0986B02311 | DB0400 | 0986BF0400 | | |
| SEAT | Ibiza | 1.9Diesel-TDI | 95 => | OB1038 | 0986B01038 | AB2311 | 0986B02311 | N6274 | 0450906274 | CB0506 | 0986BF0506 |
| SEAT | Ibiza | 1.9Diesel-TDI | 06-99 => | OB0707 | 0986B00707 | AB2053 | 0986B02053 | N6274 | 0450906274 | CB0506 | 0986BF0506 |
| SEAT | Ibiza | 1.9Diesel-TDI | 01-02 => | OB0708 | 0986B00708 | AB2332 | 0986B02332 | N6322 | 0450906322 | | |
| SEAT | Ibiza | 1.9TDI | 99 => 02 | OB0707 | 0986B00707 | AB2053 | 0986B02053 | N6409 | 0450906409 | | |
| SEAT | Ibiza | 2.0iAZL-BBX | 04 => | OB0004 | 0986B00004 | AB2332 | 0986B02332 | F5925 | 0450905925 | | |
| SEAT | Ibiza | 2.0i | | OB0004 | 0986B00004 | AB2311 | 0986B02311 | GB0240 | 0986450240 | CB0506 | 0986BF0506 |
| SEAT | Ibiza | 2.0i16v | | OB0004 | 0986B00004 | AB2311 | 0986B02311 | GB0240 | 0986450240 | CB0506 | 0986BF0506 |
| SEAT | Ibiza V | 1.416vBXW | 02.10 => | OB0019 | 0986B00019 | AB2383 | 0986B02383 | F3006 | F026403006 | CB0512 | 0986BF0512 |
| SEAT | Ibiza V | 1.616vBTS | 02.10 => | P9301 | 1457429301 | AB2383 | 0986B02383 | F3006 | F026403006 | CB0512 | 0986BF0512 |
| SEAT | Inca | 1.6i | | OB0016 | 0986B00016 | AB2018 | 0986B02018 | GB0240 | 0986450240 | CB0506 | 0986BF0506 |
| SEAT | Inca | 1.9D | | OB1038 | 0986B01038 | AB2311 | 0986B02311 | DB0400 | 0986BF0400 | CB0506 | 0986BF0506 |
| SEAT | León | 1.6i | | OB0004 | 0986B00004 | AB2310 | 0986B02310 | F5318 | 0450905318 | CB0506 | 0986BF0506 |
| SEAT | León 1.6 16v | ATN/AUS/AZD | 11.99 => 10.05 | | | AB2324 | 0986B02324 | F5318 | 0450905318 | | |

| MARCA | VEHÍCULO | MOTOR | FECHA | SC | ACEITE | SC | AIRE | SC | COMBUSTIBLE | SC | HABITÁCULO |
|---|---|---|---|---|---|---|---|---|---|---|---|
| SEAT | | | | | | S3716 | 1457433716 | | | | |
| SEAT | León 1.6 | BSE/BSF | 08.05 => | OB0004 | 0986B00004 | S9405 | 1987429405 | "F3006/F5925" | F026403006/0450905925 | | |
| SEAT | León | 1.8i20v | | OB0004 | 0986B00004 | AB2310 | 0986B02310 | F5318 | 0450905318 | CB0506 | 0986BF0506 |
| SEAT | León | 1.8i20vTurbo | | OB0004 | 0986B00004 | AB2310 | 0986B02310 | F5318 | 0450905318 | CB0506 | 0986BF0506 |
| SEAT | León 1.8 TFSI | BYT/BZB | 08.07 => | P7080 | F026407080 | S9404 | 1987429404 | F5959 | 0450905959 | M2097 | 1987432097 |
| SEAT | León 1.9 TDI | BKC/BLS | 08.05 => | OB0708 | 0986B00708 | S9404 | 1987429404 | N0008 | 1457070008 | M2097 | 1987432097 |
| SEAT | | | | | | | | N0007 | 1457070007 | | |
| SEAT | León | 1.9TurboDiesel-90CV | | OB0707 | 0986B00707 | AB2310 | 0986B02310 | DB0471 | 0986BF0471 | CB0506 | 0986BF0506 |
| SEAT | León | 1.9TurboDiesel-110CV | | OB0707 | 0986B00707 | AB2310 | 0986B02310 | DB0471 | 0986BF0471 | CB0506 | 0986BF0506 |
| SEAT | León 2.0 TDI | BKD/BMM | 08.05 => | OB0708 | 0986B00708 | S9404 | 1987429404 | N0008 | 1457070008 | M2097 | 1987432097 |
| SEAT | | | | | | | | N0007 | 1457070007 | | |
| SEAT | León 2.0 TFSI | BWA | 11.05 => | OB0709 | 0986B00709 | S3102 | 1457433102 | F5959 | 0450905959 | M2097 | 1987432097 |
| SEAT | Toledo | 1.6i | 11-98 => | OB0004 | 0986B00004 | AB2310 | 0986B02310 | F5318 | 0450905318 | CB0506 | 0986BF0506 |
| SEAT | Toledo | 1.616vAZD/AUS | 10.00 => 05.06 | | | AB2324 | 0986B02324 | F5318 | 0450905318 | | |
| SEAT | | | | | | S3716 | 1457433716 | | | | |
| SEAT | Toledo | 1.8i20v | 99 => | OB0004 | 0986B00004 | AB2310 | 0986B02310 | F5318 | 0450905318 | CB0506 | 0986BF0506 |
| SEAT | Toledo | 1.9TurboDiesel-90CV | => 02.99 | OB1038 | 0986B01038 | AB2311 | 0986B02311 | DB0400 | 0986BF0400 | CB0506 | 0986BF0506 |
| SEAT | Toledo | 1.9TurboDiesel-90CV | 03-99 => | OB0707 | 0986B00707 | AB2310 | 0986B02310 | DB0471 | 0986BF0471 | CB0506 | 0986BF0506 |
| SEAT | Toledo | 1.9TurboDiesel-110CV | 10-98 => | OB0707 | 0986B00707 | AB2310 | 0986B02310 | DB0471 | 0986BF0471 | CB0506 | 0986BF0506 |
| SEAT | Toledo 2.0 TDI | BKD/BMM | 11.04 => | OB0708 | 0986B00708 | S9404 | 1987429404 | N0008 | 1457070008 | M2097 | 1987432097 |
| SEAT | | | | | | | | N0007 | 1457070007 | | |
| SEAT | Toledo | 2.3i | 10-98 => | OB0708 | 0986B00708 | AB2310 | 0986B02310 | F5318 | 0450905318 | CB0506 | 0986BF0506 |
| SEAT | Toledo | 1.6i | => 10.98 | OB0004 | 0986B00004 | AB2311 | 0986B02311 | F5318 | 0450905318 | | |
| SEAT | Toledo | 1.8i-2.0i | | OB0004 | 0986B00004 | AB2311 | 0986B02311 | F5318 | 0450905318 | | |
| SEAT | Toledo | 1.9Diesel | | OB1038 | 0986B01038 | AB2311 | 0986B02311 | DB0400 | 0986BF0400 | | |
| SEAT | Toledo | 1.9DieselTurbo | | OB1038 | 0986B01038 | AB2311 | 0986B02311 | DB0400 | 0986BF0400 | | |
| SEAT | Toledo | 1.9TDI | | OB1038 | 0986B01038 | AB2311 | 0986B02311 | DB0400 | 0986BF0400 | | |
| SSANGYONG | | | | | | | | | | | |
| SSANGYONG | Chairman | 3.2i | | P9122 | 1457429122 | | | | | | |
| SSANGYONG | Istana Elite - Prime | 2.3i | | P9122 | 1457429122 | | | | | | |
| SSANGYONG | Istana Elite - Prime - Furgon | 2.3Diesel-2.9Diesel | 07-95 => | P9274 | 1457429274 | | | DB0730 | 0986450730 | | |
| SSANGYONG | Korando | 2.3i | 07-96 => | P9122 | 1457429122 | | | | | | |
| SSANGYONG | Korando 601 | 2.3TurboDiesel | 07-96 => | P9274 | 1457429274 | S9875 | 1457429875 | N4123 | 1457434123 | | |
| SSANGYONG | Korando 602 | 2.9Diesel | 07-96 => | P9274 | 1457429274 | S9783 | 1457429783 | N4123 | 1457434123 | | |
| SSANGYONG | Korando 602 | 2.9TurboDiesel | 07-96 => | P9274 | 1457429274 | S9783 | 1457429783 | N4123 | 1457434123 | | |
| SSANGYONG | Musso | 2.3i | 05-96 => | P9122 | 1457429122 | | | | | | |
| SSANGYONG | Musso | 3.2i | 1-96 => | P9122 | 1457429122 | S3699 | 1457433699 | | | | |
| SSANGYONG | Musso 601 | 2.3TurboDiesel | 07-93 => | P9274 | 1457429274 | S9875 | 1457429875 | N4123 | 1457434123 | | |
| SSANGYONG | Musso 602 | 2.9Diesel | 07-93 =>10.01 | P9274 | 1457429274 | S9783 | 1457429783 | N4123 | 1457434123 | | |

| MARCA | VEHÍCULO | MOTOR | FECHA | SC | ACEITE | SC | AIRE | SC | COMBUSTIBLE | SC | HABITÁCULO |
|---|---|---|---|---|---|---|---|---|---|---|---|
| SSANGYONG | Musso 602 | 2.9TurboDiesel | | P9274 | 1457429274 | S9783 | 1457429783 | N4123 | 1457434123 | | |
| SUBARU | | | | | | | | | | | |
| SUBARU | Forester | 2.0i16v | 08-97 => 12-98 | OB0002 | 0986B00002 | | | | | | |
| SUBARU | Forester | 2.0i16vTurbo | 04-99 => 03-01 | OB0002 | 0986B00002 | | | | | | |
| SUBARU | Forester | 2,5Turbo | | OB0002 | 0986B00002 | | | | | | |
| SUBARU | Impreza 4WD | 2.0i | | OB0002 | 0986B00002 | | | | | | |
| SUBARU | Impreza GL | 1.6i-1.8i | 93 => | OB0002 | 0986B00002 | | | | | | |
| SUBARU | Impreza GT | 2.0i16vTurbo | 12-00 => | OB0002 | 0986B00002 | | | | | | |
| SUBARU | Impreza GX - SW | 2.0i16v | 12-00 => | OB0002 | 0986B00002 | | | | | | |
| SUBARU | Legacy GL - SW | 1.8i-1.8i16v | | OB0002 | 0986B00002 | | | | | | |
| SUBARU | Legacy GX | 2.016v-2.2i16v | 93 => | OB0002 | 0986B00002 | | | | | | |
| SUBARU | Outback | 2.5i16v | 01 => | OB0002 | 0986B00002 | | | | | | |
| SUBARU | Outback | 2.5i16v | | OB0002 | 0986B00002 | | | | | | |
| SUBARU | SVX | 3.3i | | OB0002 | 0986B00002 | | | | | | |
| SUZUKI | | | | | | | | | | | |
| SUZUKI | Baleno | 1.6i16v | | | | | | | | | |
| SUZUKI | Carry | 0.66 | | | | | | | | | |
| SUZUKI | Fun | 1.0i | 07.03 => | OB0021 | 0986B00021 | AB2314 | 0986B02314 | GB0018 | 0986BF0018 | CB0501 | 0986BF0501 |
| SUZUKI | Fun | 1.4i | 01.04 => | OB0021 | 0986B00021 | AB2314 | 0986B02314 | GB0238 | 0986450238 | CB0501 | 0986BF0501 |
| SUZUKI | Grand Vitara | G16B | 98 => | | | S3956 | 1457433956 | | | | |
| SUZUKI | Grand Vitara | 2.0TurboDiesel | 99 => | | | S3956 | 1457433956 | DB0719 | 0986450719 | CB0563 | 0986BF0563 |
| SUZUKI | Grand Vitara | 2.0TurboDieselSQ420WD | | P2064 | 0986452064 | S3956 | 1457433956 | DB0719 | 0986450719 | CB0563 | 0986BF0563 |
| SUZUKI | Grand Vitara | 1.616v-2.0i16v | 99 => | OB0028 | 0986B00028 | S3956 | 1457433956 | | | CB0563 | 0986BF0563 |
| SUZUKI | Grand Vitara | 2.5iV624v | | | | | | | | CB0563 | 0986BF0563 |
| SUZUKI | Grand Vitara XL-7 | 2.7V624V | 05 => | | | S3956 | 1457433956 | | | CB0563 | 0986BF0563 |
| SUZUKI | Jimny | 1.3i16v | 99 => 01 | OB0028 | 0986B00028 | | | | | | |
| SUZUKI | Maruti | | => 99 | OB0028 | 0986B00028 | | | | | | |
| SUZUKI | Samurai | 1.0(F10A) | 81=>88 | OB0028 | 0986B00028 | | | | | | |
| SUZUKI | Samurai | 1.3iG13A | 86=>90 | OB0028 | 0986B00028 | | | | | | |
| SUZUKI | Samurai | 1.6h | 96 => | OB0029 | 0986B00029 | | | | | | |
| SUZUKI | Sidekick | | | | | | | | | | |
| SUZUKI | Sidekick, Sidekick Sport | 1.6i16v | 01/95 => 12/98 | | | | | | | | |
| SUZUKI | Swift GL - GLX | 1.0i-1.3i-1.6i | 94 => | | | | | | | | |
| SUZUKI | Swift Coupé GTI | 1.3i16V | | | | | | | | | |
| SUZUKI | Swift III 1.5 | M15A | 05.05 => 08.10 | P2058 | 0986452058 | S0037 | F026400037 | | | | |
| SUZUKI | Vitara | 1.6i | 93 => | | | | | | | | |
| SUZUKI | Vitara | 2.0i16v | | | | | | | | | |
| SUZUKI | Vitara | 2.0TurboDiesel | | | | S3956 | 1457433956 | | | | |
| SUZUKI | Vitara | 2.5iV624v | | | | | | | | | |

| MARCA | VEHÍCULO | MOTOR | FECHA | SC | ACEITE | SC | AIRE | SC | COMBUSTIBLE | SC | HABITÁCULO |
|---|---|---|---|---|---|---|---|---|---|---|---|
| SUZUKI | Vitara JLX | 2.0i6v | 93 => | OB2350 | 0986452350 | | | | | | |
| SUZUKI | Vitara Diesel | 1.9XUD9A | 01.95 => 03.99 | | | | | DB0695(S) | 0986450695 | | |
| SUZUKI | Vitara JX | 1.9Diesel | | P2064 | 0986452064 | S3956 | 1457433956 | DB0719 | 0986450719 | | |
| TATA | | | | | | | | | | | |
| TATA | SFC 709 | 3.8Diesel | | | | | | | | | |
| TATA | Sumo - Safari | 2.0TurboDiesel | | OB0014 | 0986B00014 | AB3554 | 0986B03554 | DB0695 | 0986450695 | | |
| TATA | Telcoline | 2.0TurboDiesel | | OB0014 | 0986B00014 | AB3554 | 0986B03554 | DB0695 | 0986450695 | | |
| TATA | Telcoline | 2.0TurboDieselIntercooler | | | | AB3554 | 0986B03554 | DB0200 | 0986BF0200 | | |
| TOYOTA | Vehículos - Comerciales | | | | | | | | | | |
| TOYOTA | Avensis | 2.0TD 2C-FE | 01.98 => | P3365 | 0451103365 | | | | | | |
| TOYOTA | Avensis III | 2.016V3ZR-FAE | 01.09 => | OB0715 | 0986B00715 | S0114 | F026400114 | | Filtrodeporvida | CB0558 | 0986BF0558 |
| TOYOTA | 4 Runner D 2800 L-SL | | | OB3325 | 0451103325 | | | DB0721 | 0986450721 | | |
| TOYOTA | 4 Runner 3.0 V6 | 3VZ-E | 07.90 => 03.96 | OB3322 | 0451103322 | | | | | | |
| TOYOTA | Camry | 2.2i16v | | OB2350 | 0986452350 | | | | | | |
| TOYOTA | Camry | 2.4i16v | | OB2350 | 0986452350 | | | | | | |
| TOYOTA | Camry | 3.0i24vV6 | | OB2350 | 0986452350 | | | | | | |
| TOYOTA | Carina E | 2.0D2C | 12-94 => 1-96 | OB2350 | 0986452350 | | | DB0721 | 0986450721 | | |
| TOYOTA | Carina E | 2.0TD2C-T | | OB2350 | 0986452350 | | | DB0721 | 0986450721 | | |
| TOYOTA | Celica | 2.0i | | OB2350 | 0986452350 | | | | | | |
| TOYOTA | Celica | 2.0i | => 94 | OB2350 | 0986452350 | | | | | | |
| TOYOTA | Coaster | 3.4Diesel | | OB2350 | 0986452350 | | | | | | |
| TOYOTA | Coaster | 4.2Diesel | | OB2350 | 0986452350 | | | DB0721 | 0986450721 | | |
| TOYOTA | Coaster | | 97 => | OB2350 | 0986452350 | | | | | | |
| TOYOTA | Corolla | 1.6i | 95 => 97 | OB2350 | 0986452350 | S3958 | 1457433958 | F0115 | 0986450115 | | |
| TOYOTA | Corolla | 1.8i | 95 => 97 | OB2350 | 0986452350 | S3958 | 1457433958 | F0115 | 0986450115 | | |
| TOYOTA | Corolla | 1.8i16v | 98 => | OB2350 | 0986452350 | S3958 | 1457433958 | F0115 | 0986450115 | CB0557 | 0986BF0557 |
| TOYOTA | Corolla IX | 1.8i16v | 02 => | OB2350 | 0986452350 | | | | | CB0557 | 0986BF0557 |
| TOYOTA | Corolla IX | 1.6i16v | 02 => | OB2350 | 0986452350 | S3958 | 1457433958 | F0115 | 0986450115 | CB0557 | 0986BF0557 |
| TOYOTA | Corolla IX 1.6i 16v | 3ZZFE | 05.02 => 03.08 | OB2350 | 0986452350 | S0017 | F026400017 | | | CB0557 | 0986BF0557 |
| TOYOTA | Corolla IX 1.8 Fielder | 1ZZFE | 11.02 => 08.08 | P2028 | 0986452028 | S0017 | F026400017 | F0115 | 0986450115 | CB0557 | 0986BF0557 |
| TOYOTA | Corolla IX 2.0 TD XEI | 1CD-FTV | 01.02 => 08.08 | P3365 | 0451103365 | S9183 | 1987429183 | N4440 | 1457434440 | M2038 | 1987432088 |
| TOYOTA | Corolla | 2.0Diesel | | OB2350 | 0986452350 | | | | | | |
| TOYOTA | Corolla 2.0 D-4D(E12) | 1CD-FTV | 06.03 => | | | S9183 | 1987429183 | | | | |
| TOYOTA | Corolla X (08´) | 1.8i16v1ZZFE | 08.08 => | P2028 | 0986452028 | S0114 | F026400114 | F0115 | 0986450115 | M2038 | 1987432088 |
| TOYOTA | Corolla X (12´) | 1.8i16v2ZRFE | 08.12 => | OB0715 | 0986B00715 | S0114 | F026400114 | | | CB0558 | 0986BF0558 |
| TOYOTA | Corona | 2.0Diesel | | OB2350 | 0986452350 | | | DB0721 | 0986450721 | | |
| TOYOTA | Corona | 2.0TurboDiesel | 98 => | OB2350 | 0986452350 | | | | | | |
| TOYOTA | Corona | 2.0i16v | 97 => | OB2350 | 0986452350 | | | | | | |
| TOYOTA | Corona | 2.0i | 94 => 96 | OB2350 | 0986452350 | | | | | | |

| MARCA | VEHÍCULO | MOTOR | FECHA | SC | ACEITE | SC | AIRE | SC | COMBUSTIBLE | SC | HABITÁCULO |
|---|---|---|---|---|---|---|---|---|---|---|---|
| TOYOTA | Dyna 150 - 300 | | | OB2350 | 0986452350 | | | DB0721 | 0986450721 | | |
| TOYOTA | Etios | 1.5i2NR-FE | 06/13 05/16 | OB0065 | 0986B00065 | AB2528 | 0986B02528 | | | | |
| TOYOTA | Hi - Ace 2000 | | 90 => | OB2350 | 0986452350 | | | | | | |
| TOYOTA | Hi - Ace Diesel | | 89 => | OB2350 | 0986452350 | | | DB0721 | 0986450721 | | |
| TOYOTA | Hilux pick -up 2.5 TD | 2KD-FTV | 02.05 => | OB3322 | 0451103322 | AB3012 | 0986B03012 | RT100 | 0986AF6100 | CB0558 | 0986BF0558 |
| TOYOTA | Hilux pick -up 2.4 D | 2L | 04.92 => 10.97 | OB3325 | 0451103325 | | | DB0721 | 0986450721 | | |
| TOYOTA | Hilux pick -up 2.8 D | 3L | 10.97 => 06.01 | OB3325 | 0451103325 | | | DB0721 | 0986450721 | | |
| TOYOTA | Hilux pick -up 3.0 D | 5L | 10.01 => 01.05 | OB3325 | 0451103325 | AB3571 | 0986B03571 | DB0234 | 0986BF0234 | | |
| TOYOTA | Hilux pick -up D-4D 3.0 TDI | 1KD-FTV | 02.05 => | OB3322 | 0451103322 | AB3012 | 0986B03012 | RT100 | 0986AF6100 | CB0558 | 0986BF0558 |
| TOYOTA | Hilux pick -up 3.0 TD | 1KZ-TE | 10.01 => 01.05 | P2062 | 0986452062 | AB3571 | 0986B03571 | DB0234 | 0986BF0234 | | |
| TOYOTA | Hilux SW4 3.0 TD | 1KZ-T | 11.00 => 06.05 | P2062 | 0986452062 | | | | | | |
| TOYOTA | Hilux SW4 3.0 TDI | 1KD-FTV | 02.05 => | OB3325 | 0451103325 | AB3012 | 0986B03012 | RT100 | 0986AF6100 | CB0558 | 0986BF0558 |
| TOYOTA | Hilux 2.4 D | | => 96 | | | | | DB0721 | 0986450721 | | |
| TOYOTA | Hilux 2.8 D 4WD | L4aspir.Natural | 96 => | OB3325 | 0451103325 | | | DB0721 | 0986450721 | | |
| TOYOTA | Hilux 2.8 D 4x4 | L4aspir.Natural | 99 => | OB3325 | 0451103325 | | | DB0721 | 0986450721 | | |
| TOYOTA | Hilux 2.7 VVT-I4 | 2TR-FE | 02.13 => | OB3322 | 0451103322 | AB3012 | 0986B03012 | | | | |
| TOYOTA | Hilux 2.4 TDI | 2GD-FTV | 11.15 => | OB3322 | 0451103322 | AB2381 | 0986B02381 | DB0251 | 0986BF0251 | CB0689 | 0986BF0689 |
| TOYOTA | Hilux 2.8 TDI | 1GD-FTV | 11.15 => | OB3322 | 0451103322 | AB2381 | 0986B02381 | DB0251 | 0986BF0251 | CB0689 | 0986BF0689 |
| TOYOTA | Land Cruiser VX 100 | 4.2TurboDiesel | 96 => | OB2350 | 0986452350 | | | | | | |
| TOYOTA | Land Cruiser Prado | 3.0TurboDiesel | 03 => | OB2350 | 0986452350 | | | | | | |
| TOYOTA | Land Cruiser | 3.0TD1KZ-TE | 04.96 => | OB2350 | 0986452350 | | | DB0721 | 0986450721 | | |
| TOYOTA | Land Cruiser Nafta | 3.0i-3.2i-3.4i | | OB2350 | 0986452350 | | | DB0721 | 0986450721 | | |
| TOYOTA | Land Cruiser | 4.2 2F6Cilindros | | OB2350 | 0986452350 | | | DB0721 | 0986450721 | | |
| TOYOTA | Land Cruiser | 4.2 2F6CilindrosTwinCarb | | OB2350 | 0986452350 | | | | | | |
| TOYOTA | Land Cruiser | 4.2 | 96 => | OB2350 | 0986452350 | | | | | | |
| TOYOTA | Lexus 400 LS | 4.0 | 12/94 => | OB2350 | 0986452350 | | | | | | |
| TOYOTA | Prius | 1.8(ZW30) 2ZR-FXE | 04.12 => | OB0715 | 0986B00715 | | | | | CB0558 | 0986BF0558 |
| TOYOTA | RAV 4 | 2.0iMP | 97 => | OB2350 | 0986452350 | | | | | | |
| TOYOTA | RAV 4 | 2.016VEFIL4 | 01 => | OB2350 | 0986452350 | | | DB0234 | 0986BF0234 | CB0556 | 0986BF0556 |
| TOYOTA | RAV 4 | 1.8i16v 1ZZ-FE | 05-00 => | OB2350 | 0986452350 | | | | | CB0556 | 0986BF0556 |
| TOYOTA | RAV 4 | 2.0i16v(3S-FE) | 4-95 => 8-00 | OB2350 | 0986452350 | | | | | | |
| TOYOTA | RAV 4 | 2.0i16v VVTi1A-ZFE | 06.00 =>02.06 | P3276 | 0451103276 | | | DB0234 | 0986BF0234 | CB0556 | 0986BF0556 |
| TOYOTA | RAV 4 | 2.0D4D 1CD-FTV | 07.01 => 02.06 | P3365 | 0451103365 | S9135 | 1987429135 | DB0234 | 0986BF0234 | CB0556 | 0986BF0556 |
| TOYOTA | RAV 4 III | 2.0VVTi 3ZR-FAE | 12.08 => | OB0715 | 0986B00715 | S0114 | F026400114 | | Filtrodeporvida | CB0558 | 0986BF0558 |
| TOYOTA | RAV 4 IV | 2.0VVTi 3ZR-FE | 06.13=> | OB0715 | 0986B00715 | S0114 | F026400114 | | Filtrodeporvida | CB0558 | 0986BF0558 |
| TOYOTA | SW 4 Turbodiesel | 3.0 | | | | | | DB0721 | 0986450721 | | |
| VALMET | Tractores | | | | | | | | | | |
| VALMET | Modelos Todos | CumminsVT378/V504/VT555 | | | | | | | | | |
| VALMET | 33D - 36D - 60 D/ID - 80 D/ID | MWMD-225/3/4 | | OB1000 | 0986B01000 | | | DB0696(P) | 0986450696 | | |

| MARCA | VEHÍCULO | MOTOR | FECHA | SC | ACEITE | SC | AIRE | SC | COMBUSTIBLE | SC | HABITÁCULO |
|---|---|---|---|---|---|---|---|---|---|---|---|
| VALMET | 360 - 600 - 600 D | | | | | | | DB0696(S) | 0986450696 | | |
| VALMET | 62-65-85 ID - 85 TA - 86 ID - 96 ID | MWMD-225/3/4 | | OB1000 | 0986B01000 | | | DB0696(P) | 0986450696 | | |
| VALMET | | | | | | | | DB0696(S) | 0986450696 | | |
| VALMET | 68-ATS/Especial - 78 Especial | MWMD-229/3/4 | | OB1000 | 0986B01000 | | | DB0200(P) | 0986BF0200 | | |
| VALMET | | | | | | | | DB0200(S) | 0986BF0200 | | |
| VALMET | 88 | MWMPID-A-229/4 | | OB1000 | 0986B01000 | | | DB0200(P) | 0986BF0200 | | |
| VALMET | | | | | | | | DB0200(S) | 0986BF0200 | | |
| VALMET | 88 TA/Especial | MWMD-229/4 | | OB1000 | 0986B01000 | | | DB0200(P) | 0986BF0200 | | |
| VALMET | | | | | | | | DB0200(S) | 0986BF0200 | | |
| VALMET | 110 Maderero | MWMD-225/6 | | OB1027 | 0986B01027 | | | DB0696(P) | 0986450696 | | |
| VALMET | | | | | | | | DB0696(S) | 0986450696 | | |
| VALMET | 110 ID / TA / Tractor Forestal | MWMD-225/6 | | OB1027 | 0986B01027 | | | DB0200(P) | 0986BF0200 | | |
| VALMET | | | | | | | | DB0200(S) | 0986BF0200 | | |
| VALMET | 118 - 118 4x4 - 128 - 128 4x4 | MWMD-229/6 | | OB1027 | 0986B01027 | AB3511(P) | 0986B03511 | DB0200(P) | 0986BF0200 | | |
| VALMET | | | | | | AB3903(S) | 0986B03903 | DB0200(S) | 0986BF0200 | | |
| VALMET | 118 - 118.4 - 128.4 - 1380 | MWMD229-6 | => 85 | OB1027 | 0986B01027 | AB3511(P) | 0986B03511 | DB0704 | 0986450704 | | |
| VALMET | | | | | | AB3903(S) | 0986B03903 | | | | |
| VALMET | | | | | | | | | | | |
| VALMET | 118 - 118.4 - 128.4 - 1380 | MWMD229-6 | 86 => | OB1027 | 0986B01027 | AB3511(P) | 0986B03511 | DB0704 | 0986450704 | | |
| VALMET | | | | | | AB3903(S) | 0986B03903 | DB0200 | 0986BF0200 | | |
| VALMET | 138 4x4 Turbo | MWMD229-6 | | OB1027 | 0986B01027 | | | DB0200(P) | 0986BF0200 | | |
| VALMET | | | | | | | | DB0200(S) | 0986BF0200 | | |
| VALMET | 138.4 - 148.4 Turbo | MWMD229-6TV | 84 => | OB1015 | 0986B01015 | AB3540(P) | 0986B03540 | DB0704 | 0986450704 | | |
| VALMET | | | | | | | | DB0200 | 0986BF0200 | | |
| VALMET | | | | | | | | | | | |
| VALMET | 148 4x4 - 1580 - 1780 T | MWMD229-6 | | OB1015 | 0986B01015 | AB3513(P) | 0986B03513 | DB0704(P) | 0986450704 | | |
| VALMET | | | | | | AB3905(S) | 0986B03905 | DB0200(S) | 0986BF0200 | | |
| VALMET | | | | | | | | | | | |
| VALMET | 148 4x4 T | MWMD229-6 | | OB1027 | 0986B01027 | AB3513(P) | 0986B03513 | DB0200(P) | 0986BF0200 | | |
| VALMET | | | | | | AB3905(S) | 0986B03905 | DB0200(S) | 0986BF0200 | | |
| VALMET | 685 | MWMD229-3 | 94 => | OB1000 | 0986B01000 | | | DB0704 | 0986450704 | | |
| VALMET | | | | | | | | DB0200 | 0986BF0200 | | |
| VALMET | 702.4 - 710 - 712 - 740 - 742 VL | | | | | AB3526 | 0986B03526 | | | | |
| VALMET | 785 | MWMD229-4 | 94 => | OB1000 | 0986B01000 | | | DB0694(P) | 0986450694 | | |
| VALMET | | | | | | | | DB0200(S) | 0986BF0200 | | |
| VALMET | 872 - 872 B - 872 K | | | | | AB3526 | 0986B03526 | | | | |
| VALMET | 880.2 - 980.4 - 980 4x4 II-HD | MWMTD229-4 | 86 => | OB1027 | 0986B01027 | AB3535(P) | 0986B03535 | DB0704 | 0986450704 | | |
| VALMET | | | | | | AB3904(S) | 0986B03904 | | | | |
| VALMET | | | | | | | | | | | |

| MARCA | VEHÍCULO | MOTOR | FECHA | SC | ACEITE | SC | AIRE | SC | COMBUSTIBLE | SC | HABITÁCULO |
|---|---|---|---|---|---|---|---|---|---|---|---|
| VALMET | 885 - 885 4x4 | MWMD229-4 | 86 => | OB1000 | 0986B01000 | AB3526(P) | 0986B03526 | DB0704(P) | 0986450704 | | |
| VALMET | | | | | | AB3902(S) | 0986B03902 | DB0200(S) | 0986BF0200 | | |
| VALMET | 885 - 885 S | Valmet420D | 94 => | | | AB3526(P) | 0986B03526 | DB0695(P) | 0986450695 | | |
| VALMET | | | | | | AB3902(S) | 0986B03902 | DB0695(S) | 0986450695 | | |
| VALMET | 885 TS | Valmet420DST | | | | AB3511(P) | 0986B03511 | DB0695 | 0986450695 | | |
| VALMET | | | | | | AB3903(S) | 0986B03903 | | | | |
| VALMET | 887 | MWMD229-4 | 87 => | | | AB3526(P) | 0986B03526 | DB0704(P) | 0986450704 | | |
| VALMET | | | | | | AB3902(S) | 0986B03902 | DB0695(S) | 0986450695 | | |
| VALMET | 900 - 900.4 - 910 - 910.4 - 940 - 940.4 | | | | | AB3526 | 0986B03526 | | | | |
| VALMET | 980 - 980 4x4 | MWMD229-4 | | OB1000 | 0986B01000 | | | DB0200(P) | 0986BF0200 | | |
| VALMET | | | | | | AB3904(S) | 0986B03904 | DB0200(S) | 0986BF0200 | | |
| VALMET | 985 | Valmet420DST | | OB1027 | 0986B01027 | AB3535(P) | 0986B03535 | DB0704 | 0986450704 | | |
| VALMET | | | | | | AB3904(S) | 0986B03904 | | | | |
| VALMET | 985 S | Valmet420DST | 94 => | | | AB3535(P) | 0986B03535 | DB0695(P) | 0986450695 | | |
| VALMET | | | | | | AB3904(S) | 0986B03904 | DB0695(S) | 0986450695 | | |
| VALMET | 985 4x4 | MWMTD229EC4TA | | OB1027 | 0986B01027 | AB3535(P) | 0986B03535 | DB0704 | 0986450704 | | |
| VALMET | | | | | | AB3904(S) | 0986B03904 | | | | |
| VALMET | | | | | | | | | | | |
| VALMET | 985 4x2 | MWMTD229EC4VM | 92 => | OB1027 | 0986B01027 | AB3511(P) | 0986B03511 | DB0704 | 0986450704 | | |
| VALMET | | | | | | AB3903(S) | 0986B03903 | | | | |
| VALMET | | | | | | | | | | | |
| VALMET | 985 Importado | Valmet420DSTurbo | 94 => | | | AB3526(P) | 0986B03526 | DB0695(P) | 0986450695 | | |
| VALMET | | | | | | AB3902(S) | 0986B03902 | DB0695(S) | 0986450695 | | |
| VALMET | 985 Turbo - 985 4x4 Turbo | MWMTD-229/4 | | OB1027 | 0986B01027 | AB3511(P) | 0986B03511 | DB0200 | 0986BF0200 | | |
| VALMET | | | | | | AB3535(P) | 0986B03535 | | | | |
| VALMET | | | | | | AB3903(S) | 0986B03903 | | | | |
| VALMET | | | | | | AB3904(S) | 0986B03904 | | | | |
| VALMET | 1180 | Cummins6B5.9 | | OB1008 | 0986B01008 | AB3535(P) | 0986B03535 | DB0519 | 0986450519 | | |
| VALMET | | | | | | AB3904(S) | 0986B03904 | | | | |
| VALMET | 1180 S | Valmet620D | 94 => | | | AB3535(P) | 0986B03535 | DB0695 | 0986450695 | | |
| VALMET | | | | | | AB3904(S) | 0986B03904 | DB0695 | 0986450695 | | |
| VALMET | 1280 | MWMD229-4 | 92 => | OB1027 | 0986B01027 | AB3511(P) | 0986B03511 | DB0704(P) | 0986450704 | | |
| VALMET | | | | | | AB3903(S) | 0986B03903 | DB0695(S) | 0986450695 | | |
| VALMET | 1280 R | MWMD229-6 | | OB1027 | 0986B01027 | AB3511(P) | 0986B03511 | DB0694(P) | 0986450694 | | |
| VALMET | | | | | | AB3903(S) | 0986B03903 | | | | |
| VALMET | | | | | | | | | | | |
| VALMET | 1380 | | 00 => | | | AB3006(P) | 0986B03006 | | | | |
| VALMET | | | | | | AB3403(S) | 0986B03403 | | | | |
| VALMET | 1380 | Valmet620DS | 94 => | OB1027 | 0986B01027 | AB3513(P) | 0986B03513 | DB0695(P) | 0986450695 | | |

| MARCA | VEHÍCULO | MOTOR | FECHA | SC | ACEITE | SC | AIRE | SC | COMBUSTIBLE | SC | HABITÁCULO |
|---|---|---|---|---|---|---|---|---|---|---|---|
| VALMET | | | | | | AB3905(S) | 0986B03905 | DB0695(S) | 0986450695 | | |
| VALMET | | | | | | | | | | | |
| VALMET | 1580 | MWMD229EC6 | 92 => | OB1015 | 0986B01015 | AB3513(P) | 0986B03513 | DB0704 | 0986450704 | | |
| VALMET | | | | | | AB3905(S) | 0986B03905 | | | | |
| VALMET | | | | | | | | | | | |
| VALMET | 1680 | | 00 => | | | AB3006(P) | 0986B03006 | | | | |
| VALMET | | | | | | AB3403(S) | 0986B03403 | | | | |
| VALMET | 1680 - 1880 | Valmet620DST | | | | AB3513(P) | 0986B03513 | DB0694 | 0986450694 | | |
| VALMET | | | | | | AB3905(S) | 0986B03905 | | | | |
| VALMET | | | | | | | | | | | |
| VALMET | 1780 Turbo | MWMTD229EC6VA | 92 => | OB1015 | 0986B01015 | AB3513(P) | 0986B03513 | DB0704 | 0986450704 | | |
| VALMET | | | | | | AB3905(S) | 0986B03905 | DB0200 | 0986BF0200 | | |
| VALMET | | | | | | | | | | | |
| VALMET | 1880 | | 00 => | | | AB3006(P) | 0986B03006 | | | | |
| VALMET | | | | | | AB3403(S) | 0986B03403 | | | | |
| VALMET | 1880 - 1880 S - 1980 S | Valtra620DS | 96 => | | | AB3513(P) | 0986B03513 | DB0694 | 0986450694 | | |
| VALMET | | | | | | AB3905(S) | 0986B03905 | | | | |
| VALMET | 3000 E | MWMD-225/3 | | | | | | DB0696 | 0986450696 | | |
| VALMET | | | | | | | | DB0696 | 0986450696 | | |
| VALMET | 3000 V | MWMD-225/4 | | OB1000 | 0986B01000 | AB3534(P) | 0986B03534 | DB0200(P) | 0986BF0200 | | |
| VALMET | | | | | | | | DB0200(S) | 0986BF0200 | | |
| VOLKSWAGEN | Vehículos - Comerciales | | | | | | | | | | |
| VOLKSWAGEN | Amarok | 2.0TDI CDBA,CNFA(90kw/122cv) | 01.10 => | OB0706 | 0986B00706 | AB2504 | 0986B02504 | N2828 | F026402828 | CB0575 | 0986BF0575 |
| VOLKSWAGEN | Amarok | 2.0BiTDICDCA(120kw/163cv) | 01.10 => | OB0706 | 0986B00706 | AB2504 | 0986B02504 | N2828 | F026402828 | CB0575 | 0986BF0575 |
| VOLKSWAGEN | Amarok | 2.0TDI CNEA (132kw/180cv) | 02.12 => | OB0706 | 0986B00706 | AB2504 | 0986B02504 | N2828 | F026402828 | CB0575 | 0986BF0575 |
| VOLKSWAGEN | Amarok | 2.0TDI CNFB (103kw/140cv) | 08.12 => | OB0706 | 0986B00706 | AB2504 | 0986B02504 | N2828 | F026402828 | CB0575 | 0986BF0575 |
| VOLKSWAGEN | Amarok | 3.0TDIV6(2H)DDXC(165kw/224cv) | 06.17 => | | | | | | | CB0575 | 0986BF0575 |
| VOLKSWAGEN | Bora | 1.8T | 03 => | OB0004 | 0986B00004 | AB2310 | 0986B02310 | F5318 | 0450905318 | CKB | 0986BF0711 |
| VOLKSWAGEN | Bora | 1.9TurboDiesel | 00 => | OB0707 | 0986B00707 | AB2310 | 0986B02310 | DB0471 | 0986BF0471 | CB0506 | 0986BF0506 |
| VOLKSWAGEN | Bora | 2.0i | 00 => | OB0004 | 0986B00004 | AB2310 | 0986B02310 | F5264 | 0450905264 | CKB | 0986BF0711 |
| VOLKSWAGEN | Caddy Van | 1.6i | 99 => | OB0018 | 0986B00018 | AB2311 | 0986B02311 | GB0018 | 0986BF0018 | CB0506 | 0986BF0506 |
| VOLKSWAGEN | Caddy | 1.9Diesel | 98 => | OB1038 | 0986B01038 | AB2311 | 0986B02311 | DB0400 | 0986BF0400 | CB0506 | 0986BF0506 |
| VOLKSWAGEN | Carat | 1.8-2.0 | | OB0018 | 0986B00018 | AB2018 | 0986B02018 | DB0400 | 0986BF0400 | | |
| VOLKSWAGEN | Cross Fox | 1.6EA111BAH | 01.05 => | OB0016 | 0986B00016 | AB2324 | 0986B02324 | GB0144 | 0986450144 | CB0512 | 0986BF0512 |
| VOLKSWAGEN | | | 08.08 => | | | AB2371 | 0986B02371 | | | | |
| VOLKSWAGEN | Cross Fox (15') | 1.6MSICWS | 03.15 => | OB0064 | 0986B00064 | AB2379 | 0986B02379 | GB0144 | 0986450144 | | |
| VOLKSWAGEN | Fox 1.6 (03') | 1.68VEA111BAH | 10.03 =>07.08 | OB0016 | 0986B00016 | AB2324 | 0986B02324 | GB0144 | 0986450144 | CB0512 | 0986BF0512 |
| VOLKSWAGEN | Fox 1.6 (03') | 1.68VEA111BAH | 08.08 => | OB0016 | 0986B00016 | AB2371 | 0986B02371 | GB0144 | 0986450144 | CB0512 | 0986BF0512 |
| VOLKSWAGEN | Fox (08') | 19.SDIASY | 08.08 => | OB0708 | 0986B00708 | AB2332 | 0986B02332 | N6426 | 0450906426 | | |

| MARCA | VEHÍCULO | MOTOR | FECHA | SC | ACEITE | SC | AIRE | SC | COMBUSTIBLE | SC | HABITÁCULO |
|---|---|---|---|---|---|---|---|---|---|---|---|
| VOLKSWAGEN | Fox (15') | 1.616VMSI | 03.15 => | OB0064 | 0986B00064 | AB2379 | 0986B02379 | GB0144 | 0986450144 | CB0512 | 0986BF0512 |
| VOLKSWAGEN | Gacel | 1.6-1.8 | | OB0018 | 0986B00018 | AB2018 | 0986B02018 | GB0008 | 0986BF0008 | | |
| VOLKSWAGEN | Gacel | 1.6Diesel | | OB0018 | 0986B00018 | AB2018 | 0986B02018 | DB0732 | 0986450732 | | |
| VOLKSWAGEN | Gol II | 1.0Mi(EA111AFZ) | 05.99 =>04.03 | OB0016 | 0986B00016 | AB2018 | 0986B02018 | GB0144 | 0986450144 | | Nolleva |
| VOLKSWAGEN | Gol III/ Country | 1.6Mi-1.8Mi(EA827UNF) | 99 => | OB0018 | 0986B00018 | AB2308 | 0986B02308 | GB0144 | 0986450144 | CB0540 | 0986BF0540 |
| VOLKSWAGEN | Gol III / Country | 1.9Diesel | 98 => | OB1038 | 0986B01038 | AB2308 | 0986B02308 | DB0400 | 0986BF0400 | CB0540 | 0986BF0540 |
| VOLKSWAGEN | Gol - Country | 1.6Mi-1.8Mi (EA827-UDH) | 97 => | OB0018 | 0986B00018 | AB2308 | 0986B02308 | GB0144 | 0986450144 | CB0540 | 0986BF0540 |
| VOLKSWAGEN | Gol | 1.6i-1.8CFi | 95 => 96 | OB0018 | 0986B00018 | AB2018 | 0986B02018 | GB0239 | 0986450239 | | |
| VOLKSWAGEN | Gol | 1.6i | 01.95 => 04.97 | OB0018 | 0986B00018 | S9076 | 1457429076 | GB0144 | 0986450144 | | Nolleva |
| VOLKSWAGEN | Gol | 1.6-1.8Mot.AP | 93 => | OB0018 | 0986B00018 | AB2018 | 0986B02018 | GB0008 | 0986BF0008 | | Nolleva |
| VOLKSWAGEN | Gol | 1.6Mot.AE | => 92 | OB3323 | 0451103323 | AB2307 | 0986B02307 | GB0144 | 0986450144 | | |
| VOLKSWAGEN | Gol | 1.6IV | 01.06 => | OB0018 | 0986B00018 | AB2308 | 0986B02308 | GB0144 | 0986450144 | CB0540 | 0986BF0540 |
| VOLKSWAGEN | Gol | 1.8GL | | OB0018 | 0986B00018 | S9076 | 1457429076 | GB0144 | 0986450144 | | |
| VOLKSWAGEN | Gol | 1.6Diesel(AP1.6DBE) | 10.95 => 08.98 | OB0018 | 0986B00018 | AB2344 | 0986B02344 | DB0732 | 0986450732 | | |
| VOLKSWAGEN | Gol - Country | 1.9DieselSD | 01.03 => | OB1038 | 0986B01038 | AB2308 | 0986B02308 | DB0400 | 0986BF0400 | CB0540 | 0986BF0540 |
| VOLKSWAGEN | Gol GTi | 1.8i-2.0i | 95 => 97 | OB0018 | 0986B00018 | AB2308 | 0986B02308 | GB0234 | 0986450234 | | |
| VOLKSWAGEN | Gol GTi | 2.0i16v | | OB0018 | 0986B00018 | AB2308 | 0986B02308 | GB0144 | 0986450144 | | |
| VOLKSWAGEN | Gol Trend | 1.6EA111CFZ | 09.08 => | OB0016 | 0986B00016 | AB2371 | 0986B02371 | GB0024 | 0986BF0024 | CB0512 | 0986BF0512 |
| VOLKSWAGEN | Gol | 1.48vMi EA111AFZ | 01.11 => | OB0018 | 0986B00018 | AB2308 | 0986B02308 | GB0024 | 0986BF0024 | CB0540 | 0986BF0540 |
| VOLKSWAGEN | Golf IV 1.6i | ATN/AUS/AZD/BCB | 06-01 => | OB0019 | 0986B00019 | AB2324 | 0986B02324 | F5318 | 0450905318 | CKB | 0986BF0711 |
| VOLKSWAGEN | | | | | | S3716 | 1457433716 | | | | |
| VOLKSWAGEN | Golf IV - Variant | 1.6i | 99 => 01 | OB0004 | 0986B00004 | AB2310 | 0986B02310 | F5318 | 0450905318 | CKB | 0986BF0711 |
| VOLKSWAGEN | Golf IV GTI | 1.8iTurbo20v | 99 => | OB0004 | 0986B00004 | AB2310 | 0986B02310 | F5318 | 0450905318 | CKB | 0986BF0711 |
| VOLKSWAGEN | Golf IV TDI - Variant | 1.9TDI | 99 => | OB0707 | 0986B00707 | AB2310 | 0986B02310 | DB0471 | 0986BF0471 | CKB | 0986BF0711 |
| VOLKSWAGEN | Golf IV - Variant | 2.0i | 99 => | OB0004 | 0986B00004 | AB2310 | 0986B02310 | F5318 | 0450905318 | CKB | 0986BF0711 |
| VOLKSWAGEN | Golf III | 1.8i-2.0i | | OB0018 | 0986B00018 | AB2309 | 0986B02309 | GB0234 | 0986450234 | CB0506 | 0986BF0506 |
| VOLKSWAGEN | Golf III GTD | 1.9TurboDiesel | | OB1038 | 0986B01038 | AB2309 | 0986B02309 | DB0400 | 0986BF0400 | CB0506 | 0986BF0506 |
| VOLKSWAGEN | Golf III | 1.9TDI | 04.96 => 07.97 | P3290 | 0451103290 | AB2309 | 0986B02309 | DB0400 | 0986BF0400 | CB0506 | 0986BF0506 |
| VOLKSWAGEN | Golf III VR6 - Motion | 2.8i | | | | | | GB0234 | 0986450234 | CB0506 | 0986BF0506 |
| VOLKSWAGEN | Golf V 1.6 | BGU/BSE/BSF/CCSA | 12.03 => 09.09 | OB0004 | 0986B00004 | S9405 | 1987429405 | F3006 | F026403006 | M2097 | 1987432097 |
| VOLKSWAGEN | Golf V 1.9 TDI | BRU/BXF/BXJ | 03.04 => 09.09 | OB0708 | 0986B00708 | S9404 | 1987429404 | N0013 | 1457070013 | M2097 | 1987432097 |
| VOLKSWAGEN | | | | | | | | N0007 | 1457070007 | | |
| VOLKSWAGEN | Golf VI | 2.0TSI(CCZA) | 11.11=> | P7080 | F026407080 | S9404 | 1987429404 | F5959 | 0450905959 | | |
| VOLKSWAGEN | Golf VII | 1.616VMSI(CWVA) | 03.15 => | OB0064 | 0986B00064 | AB2379 | 0986B02379 | | | | |
| VOLKSWAGEN | New Beetle | 1.816v-2.0i | => 00 | OB0004 | 0986B00004 | AB2310 | 0986B02310 | F5318 | 0450905318 | CKB | 0986BF0711 |
| VOLKSWAGEN | Passat - Variant | 1.8i ADR/APT/APW/ARG | 98 => | OB0004 | 0986B00004 | AB2316 | 0986B02316 | GB0234 | 0986450234 | | |
| VOLKSWAGEN | Passat - Variant | 1.8iTurbo20v AEB/ANB/APU | 98 => | OB0004 | 0986B00004 | AB2316 | 0986B02316 | GB0234 | 0986450234 | | |
| VOLKSWAGEN | Passat TDI - Variant TDI | 1.9TurboDiesel | 98 => | OB0707 | 0986B00707 | AB2316 | 0986B02316 | N4184 | 1457434184 | | |
| VOLKSWAGEN | Passat 2.8i V6 30v | ACK/ALG/APR/AQD/ATX | 01.98 => | P3313 | 0451103313 | AB2316 | 0986B02316 | GB0234 | 0986450234 | | |

| MARCA | VEHÍCULO | MOTOR | FECHA | SC | ACEITE | SC | AIRE | SC | COMBUSTIBLE | SC | HABITÁCULO |
|---|---|---|---|---|---|---|---|---|---|---|---|
| VOLKSWAGEN | Passat 2.8 V6 | AMX | 11.00 => 09.05 | P3313 | 0451103313 | AB2316 | 0986B02316 | F5906 | 0450905906 | | |
| VOLKSWAGEN | Passat TDI - Variant TDI | 1.9DieselTurbo | 95 => 97 | OB1038 | 0986B01038 | | | DB0400 | 0986BF0400 | | |
| VOLKSWAGEN | Passat 1.9 TDI | BKC/BLS/BXE | 03.05 => | OB0708 | 0986B00708 | S9404 | 1987429404 | N0008 | 1457070008 | M2097 | 1987432097 |
| VOLKSWAGEN | Passat 2.0 FSI | BLR/BVX | 03.05 => | OB0709 | 0986B00709 | S9405 | 1987429405 | | | M2097 | 1987432097 |
| VOLKSWAGEN | Passat 2.0 TFSI | AXX/BWA/CAWB/CBFA | 03.05 => | OB0709 | 0986B00709 | S9404 | 1987429404 | | | M2097 | 1987432097 |
| VOLKSWAGEN | Passat 2.0 TDI | BKP/BMP/CBAB | 03.05 => | OB0708 | 0986B00708 | S9404 | 1987429404 | N0008 | 1457070008 | M2097 | 1987432097 |
| VOLKSWAGEN | | | | | | | | N0013 | 1457070013 | | |
| VOLKSWAGEN | | | | | | | | N0007 | 1457070007 | | |
| VOLKSWAGEN | Passat 2.0 TDI | BGW/BHW | 09.03 => 09.05 | OB0708 | 0986B00708 | AB2316 | 0986B02316 | DB0471 | 0986BF0471 | CB0506 | 0986BF0506 |
| VOLKSWAGEN | | | | OB0707 | 0986B00707 | | | | | | |
| VOLKSWAGEN | Passat - Variant | 2.0i | 95 => 97 | OB0018 | 0986B00018 | | | GB0234 | 0986450234 | | |
| VOLKSWAGEN | Passat VR6 | 2.8i | 95 => 97 | P9142 | 1457429142 | | | GB0234 | 0986450234 | | |
| VOLKSWAGEN | Passat 3.2 FSI | AXZ | 09.05 => | OB0708 | 0986B00708 | AB2378 | 0986B02378 | | | M2097 | 1987432097 |
| VOLKSWAGEN | Passat 4.0 W8 4 Motion | BDN | 03.01 => 10.04 | P9142 | 1457429142 | AB2316 | 0986B02316 | F5906 | 0450905906 | | |
| VOLKSWAGEN | Passat 2.5 TDI V6 | BDH | 02.03 => 09.05 | P9152 | 1457429152 | S3772 | 1457433772 | N0509 | 0986450509 | CB0506 | 0986BF0506 |
| VOLKSWAGEN | Passat 1.8 TSI | CDDA | 11.10 => | P7080 | F026407080 | S9404 | 1987429404 | | | M2097 | 1987432097 |
| VOLKSWAGEN | Passat 2.0 TDI | CFGB | 11.10 => | OB0706 | 0986B00706 | S9404 | 1987429404 | | | M2097 | 1987432097 |
| VOLKSWAGEN | Passat 2.0 TSI | CCZB | 11.10 => | P7080 | F026407080 | S9404 | 1987429404 | | | M2097 | 1987432097 |
| VOLKSWAGEN | Pointer | 1.6i-1.8i-2.0i | | OB0018 | 0986B00018 | AB2307 | 0986B02307 | GB0234 | 0986450234 | | |
| VOLKSWAGEN | Polo Mi | 1.6i-1.8i | | OB0018 | 0986B00018 | AB2311 | 0986B02311 | GB0018 | 0986BF0018 | CB0506 | 0986BF0506 |
| VOLKSWAGEN | Polo SD Classic | 1.9Diesel | 05.96=> | OB1038 | 0986B01038 | AB2311 | 0986B02311 | DB0400 | 0986BF0400 | CB0506 | 0986BF0506 |
| VOLKSWAGEN | Polo TDI | 1.9TurboDiesel | => 00 | OB0018 | 0986B00018 | AB2311 | 0986B02311 | N6274 | 0450906274 | CB0506 | 0986BF0506 |
| VOLKSWAGEN | Polo TDI | 1.9TurboDiesel | 00 => | OB0707 | 0986B00707 | AB2311 | 0986B02311 | N6274 | 0450906274 | CB0506 | 0986BF0506 |
| VOLKSWAGEN | Polo TDI | 1.9TurboDiesel | 01.00 => | OB0018 | 0986B00018 | AB2053 | 0986B02053 | N6274 | 0450906274 | CB0506 | 0986BF0506 |
| VOLKSWAGEN | Polo TDI | 1.9TDIMOG | 01 => | OB0707 | 0986B00707 | AB2053 | 0986B02053 | N6409 | 0450906409 | CB0506 | 0986BF0506 |
| VOLKSWAGEN | Polo V | 1.6MPI(CLSA) | 12.15=> | P7181 | F026407181 | AB2383 | 0986B02383 | F3006 | F026403006 | CB0512 | 0986BF0512 |
| VOLKSWAGEN | Quantum | 2.0i | 00 => | OB0018 | 0986B00018 | AB2308 | 0986B02308 | GB0144 | 0986450144 | | |
| VOLKSWAGEN | Quantum | 2.0i | 97 => 00 | OB0018 | 0986B00018 | AB2307 | 0986B02307 | GB0144 | 0986450144 | | |
| VOLKSWAGEN | Quantum | 1.8i-2.0i | 95 => 96 | OB0018 | 0986B00018 | AB2307 | 0986B02307 | GB0239 | 0986450239 | | |
| VOLKSWAGEN | Quantum | 1.8 | => 94 | OB0018 | 0986B00018 | AB2018 | 0986B02018 | GB0239 | 0986450239 | | |
| VOLKSWAGEN | Quantum | 2.0 | => 94 | OB0018 | 0986B00018 | AB2307 | 0986B02307 | GB0234 | 0986450234 | | |
| VOLKSWAGEN | Santana | 2.0i | 03 => | OB0018 | 0986B00018 | AB2308 | 0986B02308 | GB0144 | 0986450144 | | |
| VOLKSWAGEN | Saveiro | 1.6MI(EA827)UNF | 97 => 01 | OB0018 | 0986B00018 | AB2308 | 0986B02308 | GB0144 | 0986450144 | CB0547 | 0986BF0547 |
| VOLKSWAGEN | Saveiro | 1.6MI(EA827)UNF | 05.02 => 07.10 | OB0018 | 0986B00018 | AB2308 | 0986B02308 | GB0144 | 0986450144 | CB0540 | 0986BF0547 |
| VOLKSWAGEN | Saveiro | 1.6 | 95 => 96 | OB0018 | 0986B00018 | AB2018 | 0986B02018 | GB0008 | 0986BF0008 | CB0547 | 0986BF0547 |
| VOLKSWAGEN | Saveiro | 1.6 | => 94 | OB3323 | 0451103323 | AB2307 | 0986B02307 | GB0008 | 0986BF0008 | CB0547 | 0986BF0547 |
| VOLKSWAGEN | Saveiro | 1.6Diesel | | OB0018 | 0986B00018 | AB2344 | 0986B02344 | DB0732 | 0986450732 | CB0540 | 0986BF0540 |
| VOLKSWAGEN | | | | OB1038 | 0986B01038 | | | | | | |
| VOLKSWAGEN | Saveiro | 1.9Diesel | | OB1038 | 0986B01038 | AB2308 | 0986B02308 | DB0400 | 0986BF0400 | CB0540 | 0986BF0540 |

| MARCA | VEHÍCULO | MOTOR | FECHA | SC | ACEITE | SC | AIRE | SC | COMBUSTIBLE | SC | HABITÁCULO |
|---|---|---|---|---|---|---|---|---|---|---|---|
| VOLKSWAGEN | Saveiro (10´) | 1.6 CFZ | 04.10 => | OB0016 | 0986B00016 | AB2371 | 0986B02371 | GB0144 | 0986450144 | CB0512 | 0986BF0512 |
| VOLKSWAGEN | Saveiro (15´) | 1.6 MSI (CWSA) | 03.15 => | OB0064 | 0986B00064 | AB2379 | 0986B02379 | GB0144 | 0986450144 | | |
| VOLKSWAGEN | Scirocco | 1.4 TSI CAVA | 05.12 => | P7181 | F026407181 | S9404 | 1987429404 | F5959 | 0450905959 | M2097 | 1987432097 |
| VOLKSWAGEN | Scirocco | 2.0 TSI CSZA | 05.12 => | P7080 | F026407080 | S9404 | 1987429404 | F5959 | 0450905959 | M2097 | 1987432097 |
| VOLKSWAGEN | Senda | 1.6 Diesel (AP 1.6 DBE) | 09.90 =>11.97 | OB0018 | 0986B00018 | AB2344 | 0986B02344 | DB0732 | 0986450732 | | No lleva |
| VOLKSWAGEN | | | | OB1038 | 0986B01038 | | | | | | |
| VOLKSWAGEN | Senda | 1.6 | | OB0018 | 0986B00018 | AB2018 | 0986B02018 | GB0008 | 0986BF0008 | | |
| VOLKSWAGEN | Sharan | 1.8i TAWC | 09.97 =>08.10 | OB0004 | 0986B00004 | S3742 | 1457433742 | GB0234 | 0986450234 | A102 | 1987432028 |
| VOLKSWAGEN | Sharan | 1.9 TDi | 05-00 => | OB0707 | 0986B00707 | S3742 | 1457433742 | | | A102 | 1987432028 |
| VOLKSWAGEN | Sharan TDI | 1.9 Turbo Diesel | => 04.00 | P3290 | 0451103290 | S3742 | 1457433742 | DB0400 | 0986BF0400 | A102 | 1987432028 |
| VOLKSWAGEN | Sharan II | 1.4 TSI CAVA | 12.10 => | P7181 | F026407181 | S9404 | 1987429404 | | | M2097 | 1987432097 |
| VOLKSWAGEN | Sharan II | 2.0 TSI CCZA | 11.11 => | P7080 | F026407080 | S9404 | 1987429404 | | | M2097 | 1987432097 |
| VOLKSWAGEN | Suran (06´) | 1.6i | 02.06 =>07.10 | OB0016 | 0986B00016 | AB2324 | 0986B02324 | GB0144 | 0986450144 | CB0512 | 0986BF0512 |
| VOLKSWAGEN | Suran (10´) | 1.6i | 07.10 => | OB0016 | 0986B00016 | AB2371 | 0986B02371 | GB0024 | 0986BF0024 | CB0512 | 0986BF0512 |
| VOLKSWAGEN | Suran (15') | 1,6i 16v MSI | 03.15 => | OB0064 | 0986B00064 | AB2379 | 0986B02379 | GB0144 | 0986450144 | | |
| VOLKSWAGEN | Suran | 1.9 SDI | 01.07 => | OB0708 | 0986B00708 | AB2332 | 0986B02332 | N6426 | 0450906426 | CB0512 | 0986BF0512 |
| VOLKSWAGEN | Suran Cross 1.6 8v | EA111 CFZ | 08.11 => | OB0016 | 0986B00016 | AB2324 | 0986B02324 | GB0144 | 0986450144 | CB0512 | 0986BF0512 |
| VOLKSWAGEN | | | | | | AB2371 | 0986B02371 | | | | |
| VOLKSWAGEN | Tiguan 2.0 TDI | CBAB/CFFB/CLJA | 11.07 => | OB0708 | 0986B00708 | S9404 | 1987429404 | N0008 | 1457070008 | M2097 | 1987432097 |
| VOLKSWAGEN | Tiguan 2.0 TSI | CAWA/CCTB/CCZC | 01.08 => | P7080 | F026407080 | S9404 | 1987429404 | | | M2097 | 1987432097 |
| VOLKSWAGEN | Touareg | 2.5 TDI Turbo Diesel | 04 => | OB0708 | 0986B00708 | | | | | | |
| VOLKSWAGEN | Touareg 3.2i V6 | AZZ/BAA/BRS/BMV/BMX/BKJ/BRJ | 11.02 => 04.10 | P9142 | 1457429142 | S9190 | 1987429190 | | | M2097 | 1987432097 |
| VOLKSWAGEN | Touareg 4.2 V8 | AXQ/BHX | 05.03 => 04.10 | | | S9190 | 1987429190 | | | M2097 | 1987432097 |
| VOLKSWAGEN | Touareg | 5.0 TDI V10 Turbo Diesel | 11.02 => 04.10 | | | S9190 | 1987429190 | | | M2097 | 1987432097 |
| VOLKSWAGEN | Transporter | 1.9 Diesel | | | | S3747 | 1457433747 | DB0400 | 0986BF0400 | M2056 | 1987432056 |
| VOLKSWAGEN | Transporter | 2.4 Diesel | 05.99 => 08.04 | | | S3747 | 1457433747 | DB0400 | 0986BF0400 | M2056 | 1987432056 |
| VOLKSWAGEN | Transporter 1.9 TDI | AXB | 05.03 => 12.09 | OB0708 | 0986B00708 | S0007 | F026400007 | | | CB0575 | 0986BF0575 |
| VOLKSWAGEN | Up! | 1.0 CHYB | 06.14 => | OB0064 | 0986B00064 | AB2533 | 0986B02533 | GB0024 | 0986BF0024 | CB0642 | 0986BF0642 |
| VOLKSWAGEN | Vento | 1.9 TDI Turbo Diesel | 01.06 => | OB0708 | 0986B00708 | S9404 | 1987429404 | N0013 | 1457070013 | M2097 | 1987432097 |
| VOLKSWAGEN | | | | | | | | N0007 | 1457070007 | | |
| VOLKSWAGEN | Vento | 2.0 TDI | 01.06 => | OB0708 | 0986B00708 | S9404 | 1987429404 | N0013 | 1457070013 | M2097 | 1987432097 |
| VOLKSWAGEN | | | | | | | | N0007 | 1457070007 | | |
| VOLKSWAGEN | Vento | 2.0 TDI (Variant) 81kw 110cv // 103kw 140cv | 03.11 => | OB0706 | 0986B00706 | S9404 | 1987429404 | N0013 | 1457070013 | M2097 | 1987432097 |
| VOLKSWAGEN | Vento | 2.0 TFSI | 01.08 => | OB0709 | 0986B00709 | S9404 | 1987429404 | F5959 | 0450905959 | M2097 | 1987432097 |
| VOLKSWAGEN | | | | | | S3102 | 1457433102 | | | | |
| VOLKSWAGEN | Vento | 2.0 TSI 147kw 200cv | 03.11 => | OB0709 | 0986B00709 | S3102 | 1457433102 | F5959 | 0450905959 | M2097 | 1987432097 |
| VOLKSWAGEN | | | | | | | | | | | |
| VOLKSWAGEN | Vento | 2.5 V5 110/150 | 01.06 => | OB0709 | 0986B00709 | AB2377 | 0986B02377 | F3006 | F026403006 | M2097 | 1987432097 |
| VOLKSWAGEN | Vento | 2.5 Variant 125kw 170cv | 03.11= > | OB0709 | 0986B00709 | AB2377 | 0986B02377 | F3006 | F026403006 | M2097 | 1987432097 |

| MARCA | VEHÍCULO | MOTOR | FECHA | SC | ACEITE | SC | AIRE | SC | COMBUSTIBLE | SC | HABITÁCULO |
|---|---|---|---|---|---|---|---|---|---|---|---|
| VOLKSWAGEN | Vento II | 2.08vCBPA | 05.15 => | OB0004 | 0986B00004 | S9405 | 1987429405 | F3006 | F026403006 | M2097 | 1987432097 |
| VOLKSWAGEN | Vento II | 1.4TSI CZDA | 12.16 => | OB0064 | 0986B00064 | | | F5959 | 0450905959 | M2097 | 1987432097 |
| VOLKSWAGEN | | | | | | | | F3006 | F026403006 | | |
| VOLKSWAGEN | Voyage 1.6 | EA111CFZ | 11.08 => | OB0016 | 0986B00016 | AB2371 | 0986B02371 | GB0024 | 0986BF0024 | CB0512 | 0986BF0512 |
| VOLKSWAGEN | VW 1500 - 1800 - Rural | 1.5-1.8 | | OB0014 | 0986B00014 | | | GB0008 | 0986BF0008 | | |
| VOLKSWAGEN | | | | | | | | | | | |
| VOLKSWAGEN | Camiones | | | | | | | | | | |
| VOLKSWAGEN | | | | | | | | | | | |
| VOLKSWAGEN | VW 5.140 (Delivery) | MWM4.08TCE | 08.05=> | OB1027 | 0986B01027 | AB3531(P) | 0986B03531 | DB0732 | 0986450732 | | |
| VOLKSWAGEN | | | | HB1652(DH) | 0986B01652 | AB3904(S) | 0986B03904 | DB0315(SA) | 0986BF0315 | | |
| VOLKSWAGEN | | | | | | | | DB0735 | 0986450735 | | |
| VOLKSWAGEN | VW 8.140 - 9.140 - 9.150 OD | MWM4.10TCA | 00 => | OB1027 | 0986B01027 | AB3531(P) | 0986B03531 | DB0732 | 0986450732 | | |
| VOLKSWAGEN | VW 8.140 - 9.140 - 9.150 OD | | | HB1652(DH) | 0986B01652 | AB3904(S) | 0986B03904 | DB0729(BOXSA) | 0986450729 | | |
| VOLKSWAGEN | | | | | | | | DB0218(Elem.SA) | 0986BF0218 | | |
| VOLKSWAGEN | | | | | | | | RB0582 (SR) | 0986450582 | | |
| VOLKSWAGEN | VW 8.140 - 9.140 - 9.150 | MWM4.10T4.3 | => 99 | OB1027 | 0986B01027 | AB3531(P) | 0986B03531 | DB0732 | 0986450732 | | |
| VOLKSWAGEN | VW 8.140 - 9.140 - 9.150 | | | HB1652(DH) | 0986B01652 | AB3904(S) | 0986B03904 | DB0710(SA) | 0986450710 | | |
| VOLKSWAGEN | | | | | | | | DB0219(Elem.SA) | 0986BF0219 | | |
| VOLKSWAGEN | | | | | | | | DB0220(Elem.SA) | 0986BF0220 | | |
| VOLKSWAGEN | VW 8.150 E Delivery | MWM4.08TCE | 08.05 => | OB1016 | 0986B01016 | AB3531(P) | 0986B03531 | DB0735 | 0986450735 | | |
| VOLKSWAGEN | | | | HB1652(DH) | 0986B01652 | AB3904(S) | 0986B03904 | | | | |
| VOLKSWAGEN | VW 8.150 E | CumminsInt.4ISBE | 04.10 => | | | AB3531(P) | 0986B03531 | DB0368 | 0986BF0368 | | |
| VOLKSWAGEN | | | | HB1652(DH) | 0986B01652 | AB3904(S) | 0986B03904 | DB0735 | 0986450735 | | |
| VOLKSWAGEN | VW 9.150 | MWM4.3Turbo | 02 => | | | AB3535(P) | 0986B03535 | | | | |
| VOLKSWAGEN | | | | | | AB3904(S) | 0986B03904 | | | | |
| VOLKSWAGEN | VW 9.150 E | CumminsINT4ISBE | 01.03 => | OB0511 | 0986B00511 | AB3531(P) | 0986B03531 | DB0368 | 0986BF0368 | | |
| VOLKSWAGEN | VW 9.150 E | | | HB1652(DH) | 0986B01652 | AB3904(S) | 0986B03904 | DB0726(BoxSA) | 0986450726 | | |
| VOLKSWAGEN | | | | | | | | DB0735 | 0986450735 | | |
| VOLKSWAGEN | VW 13.170 - 15.170 - 14.170 | Cummins6BTAA | 97 => 99 | OB1008 | 0986B01008 | AB3537(P) | 0986B03537 | DB0713(P) | 0986450713 | | |
| VOLKSWAGEN | VW 13.170 - 15.170 - 14.170 | | | HB1652(DH) | 0986B01652 | | | DB0519(S) | 0986450519 | | |
| VOLKSWAGEN | | | | | | | | DB0224(Elem.SA) | 0986BF0224 | | |
| VOLKSWAGEN | VW 13.170 | Cummins6BTAA | 00 => | OB1008 | 0986B01008 | AB3537(P) | 0986B03537 | DB0713(P) | 0986450713 | | |
| VOLKSWAGEN | VW 13.170 | | | HB1652(DH) | 0986B01652 | | | DB0519(S) | 0986450519 | | |
| VOLKSWAGEN | | | | | | | | DB0729(BOXSA) | 0986450729 | | |
| VOLKSWAGEN | | | | | | | | DB0218(Elem.SA) | 0986BF0218 | | |
| VOLKSWAGEN | | | | | | | | DB0224(Elem.SA) | 0986BF0224 | | |
| VOLKSWAGEN | | | | | | | | RB0582 (SR) | 0986450582 | | |
| VOLKSWAGEN | VW 13.170E | CumminsInt.4ISBE | 12.03 => | | | AB3003(P) | 0986B03003 | DB0368 | 0986BF0368 | | |
| VOLKSWAGEN | | | | HB1652(DH) | 0986B01652 | AB3406(S) | 0986B03406 | DB0735 | 0986450735 | | |

| MARCA | VEHÍCULO | MOTOR | FECHA | SC | ACEITE | SC | AIRE | SC | COMBUSTIBLE | SC | HABITÁCULO |
|---|---|---|---|---|---|---|---|---|---|---|---|
| VOLKSWAGEN | | | | | | Z8250(Secador) | 0986628250 | | | | |
| VOLKSWAGEN | | | | | | | | | | | |
| VOLKSWAGEN | VW 13.180 Worker | MWM6.10TCA | 04 => | OB1015 | 0986B01015 | AB3003(P) | 0986B03003 | DB0723 | 0986450723 | | |
| VOLKSWAGEN | | | | HB1652(DH) | 0986B01652 | AB3406(S) | 0986B03406 | DB0709(BoxSA) | 0986450709 | | |
| VOLKSWAGEN | | | | | | | | DB0220(Elem.SA) | 0986BF0220 | | |
| VOLKSWAGEN | VW 13.180 E Worker | MWM4.12TCE | 12.03=>12.14 | | | AB3003(P) | 0986B03003 | DB0369(SA) | 0986BF0369 | | |
| VOLKSWAGEN | | | | HB1652(DH) | 0986B01652 | AB3406(S) | 0986B03406 | DB0235 | 0986BF0235 | | |
| VOLKSWAGEN | | | | | | Z8250(Secador) | 0986628250 | DB0735 | 0986450735 | | |
| VOLKSWAGEN | VW 13.180 Constellation | MWM4.12TCE | 10.06 => | OB1027 | 0986B01027 | AB3008 | 0986B03008 | DB0369(SA) | 0986BF0369 | | |
| VOLKSWAGEN | | | | HB1652(DH) | 0986B01652 | | | DB0235 | 0986BF0235 | | |
| VOLKSWAGEN | | | | | | | | DB0726(BoxSA) | 0986450726 | | |
| VOLKSWAGEN | | | | | | | | DB0735 | 0986450735 | | |
| VOLKSWAGEN | VW 15.160 | Cummins6BTAA | => 12.99 | OB1008 | 0986B01008 | AB3519 | 0986B03519 | DB0519(P) | 0986450519 | | |
| VOLKSWAGEN | VW 15.160 | | | HB1652(DH) | 0986B01652 | | | DB0519(S) | 0986450519 | | |
| VOLKSWAGEN | | | | | | | | DB0224(Elem.SA) | 0986BF0224 | | |
| VOLKSWAGEN | VW 15.170E Worker | CumminsInt.4ISBE | 12.03 => | OB0511 | 0986B00511 | AB3003(P) | 0986B03003 | DB0368(SA) | 0986BF0368 | | |
| VOLKSWAGEN | | | | HB1652(DH) | 0986B01652 | AB3406(S) | 0986B03406 | DB0735 | 0986450735 | | |
| VOLKSWAGEN | | | | | | Z8250(Secador) | 0986628250 | | | | |
| VOLKSWAGEN | VW 15.180 E Worker | MWM4.12TCE | 05.05 => | OB1027 | 0986B01027 | AB3003(P) | 0986B03003 | DB0369(SA) | 0986BF0369 | | |
| VOLKSWAGEN | | | | HB1652(DH) | 0986B01652 | AB3406(S) | 0986B03406 | DB0235 | 0986BF0235 | | |
| VOLKSWAGEN | | | | | | Z8250(Secador) | 0986628250 | DB0735 | 0986450735 | | |
| VOLKSWAGEN | VW 15.180 Constellation | MWM4.12TCE | 10.06 => | OB1027 | 0986B01027 | AB3008 | 0986B03008 | DB0369(SA) | 0986BF0369 | | |
| VOLKSWAGEN | | | | HB1652(DH) | 0986B01652 | | | DB0235 | 0986BF0235 | | |
| VOLKSWAGEN | | | | | | | | DB0729(BoxSA) | 0986450729 | | |
| VOLKSWAGEN | VW 14.170 - 15.160 | Cummins6BTAA | 00 => 05-01 | OB1008 | 0986B01008 | AB3003(P) | 0986B03003 | DB0713(P) | 0986450713 | | |
| VOLKSWAGEN | | | | HB1652(DH) | 0986B01652 | AB3406(S) | 0986B03406 | DB0519(S) | 0986450519 | | |
| VOLKSWAGEN | | | | | | | | DB0224(Elem.SA) | 0986BF0224 | | |
| VOLKSWAGEN | | | | | | | | RB0582 (SR) | 0986450582 | | |
| VOLKSWAGEN | VW 15.170 | Cummins6BTAA | 06-01 => | OB1008 | 0986B01008 | AB3003(P) | 0986B03003 | DB0713(P) | 0986450713 | | |
| VOLKSWAGEN | VW 15.170 | | | HB1652(DH) | 0986B01652 | AB3406(S) | 0986B03406 | DB0519(S) | 0986450519 | | |
| VOLKSWAGEN | | | | | | | | DB0729(BOXSA) | 0986450729 | | |
| VOLKSWAGEN | | | | | | | | DB0218(Elem.SA) | 0986BF0218 | | |
| VOLKSWAGEN | | | | | | | | RB0582 (SR) | 0986450582 | | |
| VOLKSWAGEN | VW 16.170 - 17.160 | Cummins6BTAA | 98 => | OB1008 | 0986B01008 | AB3519(P) | 0986B03519 | DB0519 | 0986450519 | | |
| VOLKSWAGEN | VW 16.170 - 17.160 | | | HB1652(DH) | 0986B01652 | | | DB0224(Elem.SA) | 0986BF0224 | | |
| VOLKSWAGEN | VW 17.210 | Cummins6CTAA | 02 => | OB1008 | 0986B01008 | AB3003(P) | 0986B03003 | DB0713(P) | 0986450713 | | |
| VOLKSWAGEN | VW 17.210 | | | HB1652(DH) | 0986B01652 | AB3406(S) | 0986B03406 | DB0519(S) | 0986450519 | | |
| VOLKSWAGEN | | | | | | | | DB0729(BOXSA) | 0986450729 | | |
| VOLKSWAGEN | | | | | | | | DB0218(Elem.SA) | 0986BF0218 | | |

| MARCA | VEHÍCULO | MOTOR | FECHA | SC | ACEITE | SC | AIRE | SC | COMBUSTIBLE | SC | HABITÁCULO |
|---|---|---|---|---|---|---|---|---|---|---|---|
| VOLKSWAGEN | | | | | | | | RB0582 (SR) | 0986450582 | | |
| VOLKSWAGEN | VW 17.210 OD | MWM6.10T | 02 => | OB1015 | 0986B01015 | AB3003(P) | 0986B03003 | DB0723(P) | 0986450723 | | |
| VOLKSWAGEN | VW 17.210 OD | | | HB1652(DH) | 0986B01652 | AB3406(S) | 0986B03406 | DB0729(BOXSA) | 0986450729 | | |
| VOLKSWAGEN | | | | | | | | DB0218(Elem.SA) | 0986BF0218 | | |
| VOLKSWAGEN | VW 17.220 - 17.300 - 16.220 - 35.300 | Cummins6CTAA | => 99 | OB1011 | 0986B01011 | AB3537(P) | 0986B03537 | DB0519 | 0986450519 | | |
| VOLKSWAGEN | VW 17.220 - 17.300 - 16.220 - 35.300 | | | HB1652(DH) | 0986B01652 | | | DB0729(BOXSA) | 0986450729 | | |
| VOLKSWAGEN | | | | | | | | DB0218(Elem.SA) | 0986BF0218 | | |
| VOLKSWAGEN | | | | | | | | DB0726(BoxSA) | 0986450726 | | |
| VOLKSWAGEN | | | | | | | | RB0582 (SR) | 0986450582 | | |
| VOLKSWAGEN | VW 17.220 - 17.300 | Cummins6CTAA | 00 => 05-01 | OB1011 | 0986B01011 | AB3003(P) | 0986B03003 | DB0726(BoxSA) | 0986450726 | | |
| VOLKSWAGEN | | | | HB1652(DH) | 0986B01652 | AB3406(S) | 0986B03406 | DB0224(Elem.SA) | 0986BF0224 | | |
| VOLKSWAGEN | | | | | | | | RB0582 (SR) | 0986450582 | | |
| VOLKSWAGEN | VW 17.220 - 17.300 | Cummins6CTAA | 06-01 => | OB1011 | 0986B01011 | AB3003(P) | 0986B03003 | DB0729(BOXSA) | 0986450729 | | |
| VOLKSWAGEN | VW 17.220 - 17.300 | Cummins6CTAA | | HB1652(DH) | 0986B01652 | AB3406(S) | 0986B03406 | DB0218(Elem.SA) | 0986BF0218 | | |
| VOLKSWAGEN | | | | | | | | RB0582 (SR) | 0986450582 | | |
| VOLKSWAGEN | VW 17.240 | MWM6.10TCA | 01 => | OB1015 | 0986B01015 | AB3003(P) | 0986B03003 | DB078(BoxSA) | 0986450708 | | |
| VOLKSWAGEN | VW 17.240 | | | HB1652(DH) | 0986B01652 | AB3406(S) | 0986B03406 | DB0221(Elem.SA) | 0986BF0221 | | |
| VOLKSWAGEN | VW 17.250 E Worker/Constellation | CumminsINT6.0ISBE | 07.03 => | OB0511 | 0986B00511 | AB3003(P) | 0986B03003 | DB0368 | 0986BF0368 | | |
| VOLKSWAGEN | | | | HB1652(DH) | 0986B01652 | AB3406(S) | 0986B03406 | DB0735 | 0986450735 | | |
| VOLKSWAGEN | | | | | | Z8250(Secador) | 0986628250 | | | | |
| VOLKSWAGEN | VW 17.250 Constellation | CumminsINT6.0 | 01.07 => | OB0511 | 0986B00511 | AB3003(P) | 0986B03003 | DB0368 | 0986BF0368 | | |
| VOLKSWAGEN | | | | | | AB3406(S) | 0986B03406 | DB0235 | 0986BF0235 | | |
| VOLKSWAGEN | | | | HB1652(DH) | 0986B01652 | AB3406(S) | 0986B03406 | DB0726(BoxSA) | 0986450726 | | |
| VOLKSWAGEN | VW 17.310 - 18.310 Titan | Cummins6CTAA | 02 => | OB1011 | 0986B01011 | AB3003(P) | 0986B03003 | DB0728(P) | 0986450728 | | |
| VOLKSWAGEN | VW 17.310 - 18.310 Titan | | | HB1652(DH) | 0986B01652 | AB3406(S) | 0986B03406 | DB0224(Elem.SA) | 0986BF0224 | | |
| VOLKSWAGEN | | | | | | Z8250(Secador) | 0986628250 | DB0726(BoxSA) | 0986450726 | | |
| VOLKSWAGEN | VW 19.320 E Constellation | CumminsISC320 | 01.08 => | OB1043 | 0986B01043 | AB3003(P) | 0986B03003 | DB0735 | 0986450735 | | |
| VOLKSWAGEN | | | | HB1652(DH) | 0986B01652 | AB3406(S) | 0986B03406 | DB0230 | 0986BF0230 | | |
| VOLKSWAGEN | | | | | | Z8250(Secador) | 0986628250 | | | | |
| VOLKSWAGEN | VW 19.320 Constellation | CumminsISC | 01.07 => | OB1043 | 0986B01043 | AB3003 | 0986B03003 | DB0235 | 0986BF0235 | | |
| VOLKSWAGEN | | | | | | | | DB0726(BoxSA) | 0986450726 | | |
| VOLKSWAGEN | VW 19.330 Constellation | CumminsISL8.9 | 01.12 => | | | | | DB0230 | 0986BF0230 | | |
| VOLKSWAGEN | VW 19.420 Constellation | CumminsISL8.9 | 01.14 => | | | | | DB0230 | 0986BF0230 | | |
| VOLKSWAGEN | | | | | | | | | | | |
| VOLKSWAGEN | VW 25.320 Constellation 6x2 | CumminsISCTurboIntercooler | 01.08 => | OB1043 | 0986B01043 | AB3003(P) | 0986B03003 | DB0735 | 0986450735 | | |
| VOLKSWAGEN | | | | HB1652(DH) | 0986B01652 | AB3406(S) | 0986B03406 | DB0230 | 0986BF0230 | | |
| VOLKSWAGEN | VW 26.260 - 24.220 - 24.250 | Cummins6CTAA | 99 => | OB1011 | 0986B01011 | | | DB0713(P) | 0986450713 | | |
| VOLKSWAGEN | VW 26.260 - 24.220 - 24.250 | | | HB1652(DH) | 0986B01652 | | | DB0519(S) | 0986450519 | | |
| VOLKSWAGEN | | | | | | Z8250(Secador) | 0986628250 | RB0582 (SR) | 0986450582 | | |

| MARCA | VEHÍCULO | MOTOR | FECHA | SC | ACEITE | SC | AIRE | SC | COMBUSTIBLE | SC | HABITÁCULO |
|---|---|---|---|---|---|---|---|---|---|---|---|
| VOLKSWAGEN | VW 26.260 E.Worker | MWM6.12TCE | 12.05 => | OB1015 | 0986B01015 | AB3003(P) | 0986B03003 | DB0369(SA) | 0986BF0369 | | |
| VOLKSWAGEN | | | | HB1652(DH) | 0986B01652 | AB3406(S) | 0986B03406 | DB0235 | 0986BF0235 | | |
| VOLKSWAGEN | | | | | | Z8250(Secador) | 0986628250 | DB0735 | 0986450735 | | |
| VOLKSWAGEN | VW 26.300 | Cummins6CTAA | 00 => 05-01 | OB1011 | 0986B01011 | AB3003(P) | 0986B03003 | DB0713(P) | 0986450713 | | |
| VOLKSWAGEN | VW 26.300 | | | HB1652(DH) | 0986B01652 | AB3406(S) | 0986B03406 | DB0519(S) | 0986450519 | | |
| VOLKSWAGEN | | | | | | | | DB0726(BoxSA) | 0986450726 | | |
| VOLKSWAGEN | | | | | | | | DB0224(Elem.SA) | 0986BF0224 | | |
| VOLKSWAGEN | | | | | | | | RB0582 (SR) | 0986450582 | | |
| VOLKSWAGEN | VW 26.300 | Cummins6CTAA | 06-01 => | OB1011 | 0986B01011 | AB3003(P) | 0986B03003 | DB0713(P) | 0986450713 | | |
| VOLKSWAGEN | VW 26.300 | | | HB1652(DH) | 0986B01652 | AB3406(S) | 0986B03406 | DB0519(S) | 0986450519 | | |
| VOLKSWAGEN | | | | | | | | DB0729(BOXSA) | 0986450729 | | |
| VOLKSWAGEN | | | | | | | | DB0218(Elem.SA) | 0986BF0218 | | |
| VOLKSWAGEN | VW 26.310 - 36.310 | Cummins6CTAA | 02 => | OB1011 | 0986B01011 | AB3003(P) | 0986B03003 | DB0519 | 0986450519 | | |
| VOLKSWAGEN | | | | HB1652(DH) | 0986B01652 | AB3406(S) | 0986B03406 | DB0731 | 0986450731 | | |
| VOLKSWAGEN | VW 26.310 - 36.310 | | | | | Z8250(Secador) | 0986628250 | RB0582 (SR) | 0986450582 | | |
| VOLKSWAGEN | | | | | | | | DB0224(Elem.SA) | 0986BF0224 | | |
| VOLKSWAGEN | VW 31.260 E.Worker | MWM6.12TCE | 12.05 => | OB1015 | 0986B01015 | AB3003(P) | 0986B03003 | DB0369(SA) | 0986BF0369 | | |
| VOLKSWAGEN | | | | HB1652(DH) | 0986B01652 | AB3406(S) | 0986B03406 | DB0235 | 0986BF0235 | | |
| VOLKSWAGEN | | | | | | Z8250(Secador) | 0986628250 | DB0735 | 0986450735 | | |
| VOLKSWAGEN | VW 31.320 E | CumminsISC | 02.07 => | OB1043 | 0986B01043 | AB3003(P) | 0986B03003 | DB0735 | 0986450735 | | |
| VOLKSWAGEN | VW 31.320 E | | | HB1652(DH) | 0986B01652 | AB3406(S) | 0986B03406 | DB0230 | 0986BF0230 | | |
| VOLVO | | | | | | | | | | | |
| VOLVO | 240 | 2.3i | | OB3323 | 0451103323 | | | | | | |
| VOLVO | 240 | 2.4Diesel | | OB1038 | 0986B01038 | | | DB0732 | 0986450732 | | |
| VOLVO | 940 | 2.0i-2.3i-2.3i16v | | OB3323 | 0451103323 | | | | | | |
| VOLVO | 940 | 2.4TurboDiesel | | | | | | DB0732 | 0986450732 | | |
| VOLVO | 960 | 3.0i | | OB3323 | 0451103323 | | | | | | |
| VOLVO | 740 - 760 | 2.0i-2.3i | | OB3323 | 0451103323 | | | | | | |
| VOLVO | 740 - 760 | 2.4Diesel | | | | | | DB0732 | 0986450732 | | |
| VOLVO | 850 | 2.5i20v-2.5i | | OB3323 | 0451103323 | | | F5216 | 0450905216 | | |
| VOLVO | 850 | 2.3iTurbo20v | | OB3323 | 0451103323 | | | F5216 | 0450905216 | | |
| VOLVO | 850 | 2.5TurboDiesel | | | | | | N4184 | 1457434184 | | |
| VOLVO | C 30 | 2.0B4204S3/S4 | 12.06 = > | P7017 | F026407017 | AB2041 | 0986B02041 | F3009 | F026403009 | | |
| VOLVO | C 30 | 2.4B5254T3 | 12.06 =>04.10 | P9244 | 1457429244 | S3583 | 1457433583 | F3009 | F026403009 | | |
| VOLVO | C 70 | 2.0i-2.3i-2.5i | | OB3323 | 0451103323 | | | F5216 | 0450905216 | | |
| VOLVO | S 40 - V 40 | 1.8i16v | => 07.99 | OB0014 | 0986B00014 | S3272 | 1457433272 | F5908 | 0450905908 | | |
| VOLVO | S 40 - V 40 | 1.8i16v | 08-99 => | | | | | F5908 | 0450905908 | | |
| VOLVO | S 40 - V 40 | 1.9TurboDiesel | => 02.00 | P3260 | 0451103260 | AB2343 | 0986B02343 | N4291 | 1457434291 | | |
| VOLVO | S 40 - V 40 | 1.9D | 03-00 => | P3260 | 0451103260 | | | DB0210 | 0986BF0210 | | |

| MARCA | VEHÍCULO | MOTOR | FECHA | SC | ACEITE | SC | AIRE | SC | COMBUSTIBLE | SC | HABITÁCULO |
|---|---|---|---|---|---|---|---|---|---|---|---|
| VOLVO | S 40 - V 40 | 2.0i16v | | | | | | F5908 | 0450905908 | | |
| VOLVO | S 40 - V 40 | 2.0i16vTurbo | | | | | | F5908 | 0450905908 | | |
| VOLVO | S 40 T4 - V 40 T4 | 1.9i | | | | | | F5908 | 0450905908 | | |
| VOLVO | S 40 II | 2.4B5244S5 | 02.04 => 12.09 | P9244 | 1457429244 | S3583 | 1457433583 | F3009 | F026403009 | | |
| VOLVO | S 60 | 2.0i-2.3i-2.4i-2.5i | | | | | | F5908 | 0450905908 | | |
| VOLVO | S 60 | 2.0i-2.3i-2.4i-2.5i | | | | | | | | | |
| VOLVO | S 70 - V 70 | 2.5i-2.5iTurbo-2.5i20v | | OB3323 | 0451103323 | | | F5216 | 0450905216 | | |
| VOLVO | S 70 R | 2.3iTurbo | | OB3323 | 0451103323 | | | F5216 | 0450905216 | | |
| VOLVO | S 70 T-5 | 2.3iTurbo | | OB3323 | 0451103323 | | | F5216 | 0450905216 | | |
| VOLVO | S 70 TDI - V 70 TDI | 2.5TurboDiesel | | | | | | N4184 | 1457434184 | | |
| VOLVO | S 80 | 2.9i | | | | | | F5908 | 0450905908 | | |
| VOLVO | S 80 T6 | 2.8i | | | | | | F5908 | 0450905908 | | |
| VOLVO | S 90 - V 90 | 3.0i | | OB3323 | 0451103323 | | | | | | |
| VOLVO | V 50 | 2.4B5244S5 | 03.04 => | P9244 | 1457429244 | S3583 | 1457433583 | F3009 | F026403009 | | |
| VOLVO | V 50 | 2.5T5D5244T7 | 03.07 => | P9244 | 1457429244 | S3583 | 1457433583 | F3009 | F026403009 | | |
| VOLVO | V 70 | 2.4iTurbo | | | | | | F5908 | 0450905908 | | |
| VOLVO | V 70 AWD | 2.5i | => 08.98 | OB3323 | 0451103323 | | | F5216 | 0450905216 | | |
| VOLVO | V 70 AWD | 2.5i | 9-98 => | | | | | F5216 | 0450905216 | | |
| VOLVO | V 70 R AWD | 2.3iTurbo | => 08.98 | OB3323 | 0451103323 | | | F5216 | 0450905216 | | |
| VOLVO | V 70 R AWD | 2.3iTurbo | 9-98 => | | | | | F5216 | 0450905216 | | |
| VOLVO | V 70 T-5 | 2.3iTurbo | => 08.98 | OB3323 | 0451103323 | | | F5216 | 0450905216 | | |
| VOLVO | V 70 T-5 | 2.3iTurbo | 9-98 => | | | | | F5216 | 0450905216 | | |
| VOLVO | V 70 XC AWD | 2.5i | => 08.98 | OB3323 | 0451103323 | | | F5216 | 0450905216 | | |
| VOLVO | V 70 XC AWD | 2.5i | 9-98 => | | | | | F5216 | 0450905216 | | |
| VOLVO | XC 90 | 2.4D5 | 03 => | P9244 | 1457429244 | | | | | | |
| VOLVO | XC 90 | 2.9T6 | 03 => | | | | | | | | |
| VOLVO | | | | | | | | | | | |
| VOLVO | Camiones - Omnibus | | | | | | | | | | |
| VOLVO | | | | | | | | | | | |
| VOLVO | B7R | D7B260 | 98 => | OB1018(P) | 0986B01018 | AB2288(P) | 1457432288 | DB0725 | 0986450725 | | |
| VOLVO | | | | OB1020(S) | 0986B01020 | | | DB0734(BoxSA) | 0986450734 | | |
| VOLVO | B7R | | | | | Z8250(Secador) | 0986628250 | DB0222(Elem.SA) | 0986BF0222 | | |
| VOLVO | | | | | | | | DB0708(BoxSA) | 0986450708 | | |
| VOLVO | | | | | | | | DB0221(Elem.SA) | 0986BF0221 | | |
| VOLVO | | | | | | | | DB0232 | 0986BF0232 | | |
| VOLVO | B 7R 230 | D7B230 | 98 => | | | Z8250(Secador) | 0986628250 | | | | |
| VOLVO | B 7R 285 | D7A285 | 98 => | | | Z8250(Secador) | 0986628250 | | | | |
| VOLVO | B 7R RUTA | D7A285 | 02 => | | | Z8250(Secador) | 0986628250 | | | | |
| VOLVO | B 7R URBANO | D7B230/260 | | OB1018 | 0986B01018 | AB2288(P) | 1457432288 | DB0725 | 0986450725 | | |

| MARCA | VEHÍCULO | MOTOR | FECHA | SC | ACEITE | SC | AIRE | SC | COMBUSTIBLE | SC | HABITÁCULO |
|---|---|---|---|---|---|---|---|---|---|---|---|
| VOLVO | | | | | | | | DB0734(BoxSA) | 0986450734 | | |
| VOLVO | | | | | | Z8250(Secador) | 0986628250 | DB0222(Elem.SA) | 0986BF0222 | | |
| VOLVO | | | | | | | | DB0232 | 0986BF0232 | | |
| VOLVO | B10 M - B 10 R | DH10A-THD101KC | 97 => | OB1018(P) | 0986B01018 | | | DB0725 | 0986450725 | | |
| VOLVO | | | | OB1020(S) | 0986B01020 | | | DB0734(BoxSA) | 0986450734 | | |
| VOLVO | B10 M - B 10 R | | | HB1652(DH) | 0986B01652 | | | DB0222(Elem.SA) | 0986BF0222 | | |
| VOLVO | | | | | | Z8250(Secador) | 0986628250 | | | | |
| VOLVO | B 12 B | TD122FH | 97 => | OB1018(P) | 0986B01018 | | | DB0519(P) | 0986450519 | | |
| VOLVO | | | | OB1020(S) | 0986B01020 | | | DB0519(S) | 0986450519 | | |
| VOLVO | B 12 B | | | HB1652(DH) | 0986B01652 | | | | | | |
| VOLVO | | | | | | Z8250(Secador) | 0986628250 | | | | |
| VOLVO | B 10 - 12 | | | OB1018 | 0986B01018 | | | DB0725 | 0986450725 | | |
| VOLVO | | | | HB1652(DH) | 0986B01652 | | | DB0734(BoxSA) | 0986450734 | | |
| VOLVO | | | | | | | | DB0222(Elem.SA) | 0986BF0222 | | |
| VOLVO | | | | | | | | DB0232 | 0986BF0232 | | |
| VOLVO | B 10 M - B 58(Intercooler) | THD101KC/KL | => 93 | OB1018(P) | 0986B01018 | AB3521 | 0986B03521 | DB0519 | 0986450519 | | |
| VOLVO | | | | OB1020(S) | 0986B01020 | | | | | | |
| VOLVO | B 10 M - B 58(Intercooler) | | | HB1652(DH) | 0986B01652 | | | | | | |
| VOLVO | | | | | | Z8250(Secador) | 0986628250 | | | | |
| VOLVO | B 12 | | 94 => | OB1018(P) | 0986B01018 | | | DB0519(P) | 0986450519 | | |
| VOLVO | | | | OB1020(S) | 0986B01020 | | | DB0519(S) | 0986450519 | | |
| VOLVO | | | | HB1652(DH) | 0986B01652 | | | DB0701(SA) | 0986450701 | | |
| VOLVO | B 12 R | D12DIny.Elect. | 03 => | OB1018(P) | 0986B01018 | | | DB0215(Elem.SA) | 0986BF0215 | | |
| VOLVO | | | | OB1020(S) | 0986B01020 | | | N2017 | F026402017 | | |
| VOLVO | B 12 R | | | HB1652(DH) | 0986B01652 | | | | | | |
| VOLVO | | | | | | Z8250(Secador) | 0986628250 | | | | |
| VOLVO | B 12 R 340/380/420 | D12D340/380/420 | 03 => | OB1018 | 0986B01018 | | | N2017 | F026402017 | | |
| VOLVO | | | | HB1652(DH) | 0986B01652 | | | | | | |
| VOLVO | Camiones Serie NL intercoler | D10A-TD123ES-E | | OB1018 | 0986B01018 | | | DB0519 | 0986450519 | | |
| VOLVO | Camiones Serie NL intercoler | | | HB1652(DH) | 0986B01652 | | | | | | |
| VOLVO | FH 400 | D13A/B-400 | 09.05 => | OB1020 | 0986B01020 | | | N2017 | F026402017 | M1167 | 1987431167 |
| VOLVO | FH 440 | D13A/B-440 | 09.05 => | OB1020 | 0986B01020 | | | N2017 | F026402017 | M1167 | 1987431167 |
| VOLVO | FH 480 | D13A-480 | 09.05 => | OB1020 | 0986B01020 | | | N2017 | F026402017 | M1167 | 1987431167 |
| VOLVO | FH 520 | D13A-520 | 09.05 => | OB1020 | 0986B01020 | | | N2017 | F026402017 | M1167 | 1987431167 |
| VOLVO | FH 12 420 T/R Globetrotter | | 99 => | OB1018(P) | 0986B01018 | | | DB0725 | 0986450725 | | |
| VOLVO | | | | OB1020(S) | 0986B01020 | | | DB0232 | 0986BF0232 | | |
| VOLVO | FH 12 420 T/R Globetrotter | | | HB1652(DH) | 0986B01652 | | | DB078(BoxSA) | 0986450708 | | |
| VOLVO | | | | | | Z8250(Secador) | 0986628250 | | | | |
| VOLVO | FH 12 380 T/ R Globetrotter | D12ATopGun | 98 => | OB1018(P) | 0986B01018 | | | DB0725 | 0986450725 | | |

| MARCA | VEHÍCULO | MOTOR | FECHA | SC | ACEITE | SC | AIRE | SC | COMBUSTIBLE | SC | HABITÁCULO |
|---|---|---|---|---|---|---|---|---|---|---|---|
| VOLVO | | | | OB1020(S) | 0986B01020 | | | DB0232 | 0986BF0232 | | |
| VOLVO | FH 12 380 T/ R Globetrotter | | | HB1652(DH) | 0986B01652 | | | DB0734(BoxSA) | 0986450734 | | |
| VOLVO | | | | | | Z8250(Secador) | 0986628250 | DB0222(Elem.SA) | 0986BF0222 | | |
| VOLVO | FH 12 380 T/ R Globetrotter | D12A | 93 => 97 | OB1018(P) | 0986B01018 | | | DB0725 | 0986450725 | | |
| VOLVO | | | | OB1020(S) | 0986B01020 | | | DB0701(SA) | 0986450701 | | |
| VOLVO | FH 12 380 T/ R Globetrotter | | | HB1652(DH) | 0986B01652 | Z8250(Secador) | 0986628250 | | | | |
| VOLVO | FH 12 380 | D12D-380 | 11.01 =>12.05 | OB1018(P) | 0986B01018 | | | N2017 | F026402017 | M1167 | 1987431167 |
| VOLVO | FH 12 380 | | | OB1020(S) | 0986B01020 | Z8250(Secador) | 0986628250 | DB0215(Elem.SA) | 0986BF0215 | | |
| VOLVO | FH 12 420 | D12D-420 | 11.01 =>12.05 | OB1018 | 0986B01018 | | | N2017 | F026402017 | M1167 | 1987431167 |
| VOLVO | FH 12 420 | | | | | Z8250(Secador) | 0986628250 | DB0215(Elem.SA) | 0986BF0215 | | |
| VOLVO | FH 12- 460 | D12D-460 | 11-01 => | OB1018(P) | 0986B01018 | | | DB0215(Elem.SA) | 0986BF0215 | M1167 | 1987431167 |
| VOLVO | FH 12- 460 | | 11.01 = >12.05 | OB1020(S) | 0986B01020 | | | N2017 | F026402017 | | |
| VOLVO | | | | HB1652(DH) | 0986B01652 | | | | | | |
| VOLVO | FM 10.320 R/T | D10B | 00 => | OB1018(P) | 0986B01018 | | | DB0725 | 0986450725 | | |
| VOLVO | | | | HB1652(DH) | 0986B01652 | | | | | | |
| VOLVO | FM 12.340/ 380/420 R/T | D12C | 00 => | OB1020 | 0986B01020 | | | DB0725 | 0986450725 | | |
| VOLVO | | | | HB1652(DH) | 0986B01652 | | | | | | |
| VOLVO | | | | | | Z8250(Secador) | 0986628250 | | | | |
| VOLVO | FM 12.340/ 380 | D12D340/380 | 11.01 = >09.05 | OB1018 | 0986B01018 | | | N2017 | F026402017 | M1167 | 1987431167 |
| VOLVO | FM 12.340/ 380 | | | | | Z8250(Secador) | 0986628250 | | | | |
| VOLVO | FM 12 - 420/460 | D12D420/460 | | OB1018(P) | 0986B01018 | | | DB0215(Elem.SA) | 0986BF0215 | M1167 | 1987431167 |
| VOLVO | | | 11.01 = >09.05 | OB1020(S) | 0986B01020 | | | N2017 | F026402017 | | |
| VOLVO | FM 370/FMX 370 | D11C-370E5/EEV | 04.09 => | OB1018(P) | 0986B01018 | | | N2017 | F026402017 | M1167 | 1987431167 |
| VOLVO | | | | OB1020(S) | 0986B01020 | | | | | | |
| VOLVO | | | | HB1652(DH) | 0986B01652 | | | | | | |
| VOLVO | FMX 400/440/480 | D13A/B-400/440/480 | 09.08 => | | | | | N2017 | F026402017 | M1167 | 1987431167 |
| VOLVO | N 10 | T101F/G | 93 => | OB1018(P) | 0986B01018 | | | DB0519 | 0986450519 | | |
| VOLVO | | | | HB1652(DH) | 0986B01652 | | | | | | |
| VOLVO | N 10 - N 12 H / XH / XHT | TD100A-101G-120GA | 80 => | OB1018(P) | 0986B01018 | AB3521 | 0986B03521 | DB0519 | 0986450519 | | |
| VOLVO | | | | HB1652(DH) | 0986B01652 | | | | | | |
| VOLVO | N 12 | TD121F | 93 => | OB1018(P) | 0986B01018 | | | DB0519(P) | 0986450519 | | |
| VOLVO | | | | HB1652(DH) | 0986B01652 | | | DB0701(SA) | 0986450701 | | |
| VOLVO | NH 12 140 EDC Gold TD 123 | D12Cc/Inyecc.Elect. | 07.99 =>12.06 | OB1018(P) | 0986B01018 | | | DB0725 | 0986450725 | | |
| VOLVO | | | | OB1020(S) | 0986B01020 | | | | | | |
| VOLVO | NH 12 140 EDC Gold TD 123 | | | HB1652(DH) | 0986B01652 | Z8250(Secador) | 0986628250 | | | | |
| VOLVO | NH 12 340/ 360/ 380/ 420 T/ R | D12C | 99 => | OB1018(P) | 0986B01018 | | | DB078(BoxSA) | 0986450708 | | |
| VOLVO | | | | OB1020(S) | 0986B01020 | | | DB0232 | 0986BF0232 | | |
| VOLVO | NH 12 340/ 360/ 380/ 420 T/ R | | | HB1652(DH) | 0986B01652 | Z8250(Secador) | 0986628250 | | | | |
| VOLVO | NH 12 360 EDC Gold TD 123 | D12Cc/Inyecc.Elect. | 01.98 => | OB1018(P) | 0986B01018 | | | DB0725 | 0986450725 | | |

| MARCA | VEHÍCULO | MOTOR | FECHA | SC | ACEITE | SC | AIRE | SC | COMBUSTIBLE | SC | HABITÁCULO |
|---|---|---|---|---|---|---|---|---|---|---|---|
| VOLVO | | | | OB1020(S) | 0986B01020 | | | DB0222(Elem.SA) | 0986BF0222 | | |
| VOLVO | NH 12 360 EDC Gold TD 123 | | | HB1652(DH) | 0986B01652 | Z8250(Secador) | 0986628250 | | | | |
| VOLVO | NH 12 380 EDC Gold TD 123 | D12Cc/Inyecc.Elect. | 7.99 => 12.06 | OB1018(P) | 0986B01018 | | | DB0725 | 0986450725 | | |
| VOLVO | | | | OB1020(S) | 0986B01020 | | | | | | |
| VOLVO | NH 12 380 EDC Gold TD 123 | | | HB1652(DH) | 0986B01652 | Z8250(Secador) | 0986628250 | | | | |
| VOLVO | NH 12 460 | D12DIny.Elect. | | OB1018(P) | 0986B01018 | | | DB0215(Elem.SA) | 0986BF0215 | | |
| VOLVO | | | | OB1020(S) | 0986B01020 | | | | | | |
| VOLVO | NH 12 460 | | | HB1652(DH) | 0986B01652 | Z8250(Secador) | 0986628250 | | | | |
| VOLVO | NL 10 - 280 T/R | TD101G | 93 => | OB1018 | 0986B01018 | | | DB0519 | 0986450519 | | |
| VOLVO | NL 10 - 280 T/R | | | HB1652(DH) | 0986B01652 | | | | | | |
| VOLVO | | | | | | | | | | | |
| VOLVO | NL 10 - 310 - 340 T/R | TD102FT-TD102FS | 93 => 95 | OB1018 | 0986B01018 | | | DB0519 | 0986450519 | | |
| VOLVO | | | | HB1652(DH) | 0986B01652 | | | | | | |
| VOLVO | NL 10 - 320 T/R EDC Gold | D10Ac/Inyecc.Elect. | 96 => 00 | OB1018(P) | 0986B01018 | | | DB0519 | 0986450519 | | |
| VOLVO | | | | OB1020(S) | 0986B01020 | | | DB0734(BoxSA) | 0986450734 | | |
| VOLVO | NL 10 - 320 T/R EDC Gold | | | HB1652(DH) | 0986B01652 | | | DB0222(Elem.SA) | 0986BF0222 | | |
| VOLVO | | | | | | Z8250(Secador) | 0986628250 | | | | |
| VOLVO | NL 12 H - XH - XHT | | 01.80 => | OB1018 | 0986B01018 | AB3521 | 0986B03521 | DB0519 | 0986450519 | | |
| VOLVO | | | | HB1652(DH) | 0986B01652 | | | | | | |
| VOLVO | NL 12 -140/360/ 410 T/R | TD123E/ESc/EDC | 01.98 => | OB1018(P) | 0986B01018 | | | DB0519 | 0986450519 | | |
| VOLVO | | | | OB1020(S) | 0986B01020 | | | DB0734(BoxSA) | 0986450734 | | |
| VOLVO | NL 12 -140/360/ 410 T/R | | | HB1652(DH) | 0986B01652 | Z8250(Secador) | 0986628250 | DB0222(Elem.SA) | 0986BF0222 | | |
| VOLVO | NL 12 - 360/ 400/ 410 T/ R | TD122FS | 93 => | OB1018 | 0986B01018 | | | DB0519 | 0986450519 | | |
| VOLVO | NL 12 - 360/ 400/ 410 T/ R | | | HB1652(DH) | 0986B01652 | | | | | | |
| VOLVO | V 12 | | | OB1018(P) | 0986B01018 | | | DB0725 | 0986450725 | | |
| VOLVO | | | | OB1020(S) | 0986B01020 | | | DB0701(SA) | 0986450701 | | |
| VOLVO | V 12 | | | HB1652(DH) | 0986B01652 | | | DB0734(BoxSA) | 0986450734 | | |
| VOLVO | | | | | | | | DB0222(Elem.SA) | 0986BF0222 | | |
| VOLVO | | | | | | | | RB0581(SR) | 0986450581 | | |
| VOLVO | VM 15.210 | MWM5A206 | 01.05 => | OB1018 | 0986B01018 | AB3010 | 0986B03010 | DB0369(SA) | 0986BF0369 | | |
| VOLVO | | | | HB1652(DH) | 0986B01652 | | | DB0735 | 0986450735 | | |
| VOLVO | VM 260 | MWM7A260 | 01.05 => | OB1018 | 0986B01018 | AB3010 | 0986B03010 | DB0369(SA) | 0986BF0369 | | |
| VOLVO | VM 260 | | | HB1652(DH) | 0986B01652 | | | DB0735 | 0986450735 | | |
| VOLVO | VM 310 | MWM7A310 | 01.05 => | OB1018 | 0986B01018 | AB3010 | 0986B03010 | DB0369(SA) | 0986BF0369 | | |
| VOLVO | VM 310 | | | HB1652(DH) | 0986B01652 | | | DB0735 | 0986450735 | | |
| VOLVO | VM 17 - 210/ 240 4x2 | MWM6A | 03.04 => | OB1018 | 0986B01018 | AB3010 | 0986B03010 | DB0725 | 0986450725 | | |
| VOLVO | VM 17 - 210/ 240 4x2 | | | | | Z8250(Secador) | 0986628250 | | | | |
| VOLVO | VM 17 - 206 4x2 | MWM6A | 03.04=> | OB1018 | 0986B01018 | AB3010 | 0986B03010 | DB0725 | 0986450725 | | |
| VOLVO | VM 17 - 206 4x2 | | | HB1652(DH) | 0986B01652 | Z8250(Secador) | 0986628250 | | | | |

| MARCA | VEHÍCULO | MOTOR | FECHA | SC | ACEITE | SC | AIRE | SC | COMBUSTIBLE | SC | HABITÁCULO |
|---|---|---|---|---|---|---|---|---|---|---|---|
| VOLVO | VM 17 -206 6X2 | MWM6A | 03.04 => | OB1018 | 0986B01018 | AB3010 | 0986B03010 | DB0725 | 0986450725 | | |
| VOLVO | VM 17 -206 6X2 | | | | | Z8250(Secador) | 0986628250 | | | | |
| VOLVO | VM 23 - 206 6x2 | MWM6A | 03.04 => | OB1018 | 0986B01018 | AB3010 | 0986B03010 | DB0725 | 0986450725 | | |
| VOLVO | VM 23 - 206 6x2 | | | HB1652(DH) | 0986B01652 | Z8250(Secador) | 0986628250 | | | | |
| VOLVO | VM 23 - 210/ 240 6x2 | MWM6A | 03.04 => | OB1018 | 0986B01018 | AB3010 | 0986B03010 | DB0725 | 0986450725 | | |
| VOLVO | VM 23 - 210/ 240 6x2 | | | | | Z8250(Secador) | 0986628250 | | | | |
| ZANELLO | Tractores | | | | | | | | | | |
| ZANELLO | UP 10 | Perkins4-203 | | OB3325 | 0451103325 | AB3534(P) | 0986B03534 | DB0695(P) | 0986450695 | | |
| ZANELLO | | | | HB1000(TR) | 0986B01000 | | | DB0695(S) | 0986450695 | | |
| ZANELLO | UP 100 | | | OB1028 | 0986B01028 | AB3511(P) | 0986B03511 | DB0695(P) | 0986450695 | | |
| ZANELLO | | | | | | AB3903 | 0986B03903 | DB0695(S) | 0986450695 | | |
| ZANELLO | UP 100 | Perkins6-354 | | OB3325 | 0451103325 | AB3511(P) | 0986B03511 | DB0695(P) | 0986450695 | | |
| ZANELLO | | | | HB1000(TR) | 0986B01000 | AB3903 | 0986B03903 | DB0695(S) | 0986450695 | | |
| ZANELLO | M 200 - M 413 F | M.BenzOM352 | | OB1565 | 0986B01565 | AB3535 | 0986B03535 | DB0200(P) | 0986BF0200 | | |
| ZANELLO | | | | | | AB3904(S) | 0986B03904 | DB0200(S) | 0986BF0200 | | |
| ZANELLO | 200 M | MWM229/4 | => 89 | OB1000 | 0986B01000 | AB3526 | 0986B03526 | DB0704 | 0986450704 | | |
| ZANELLO | | | | | | AB3902(S) | 0986B03902 | DB0732 | 0986450732 | | |
| ZANELLO | 200 M | MWM229/4 | 90 => | OB1000 | 0986B01000 | | | DB0704 | 0986450704 | | |
| ZANELLO | | | | | | | | DB0732 | 0986450732 | | |
| ZANELLO | V 206 | ZanelloVMNA3105 | | | | AB3534(P) | 0986B03534 | | | | |
| ZANELLO | | | | HB1000(TR) | 0986B01000 | | | | | | |
| ZANELLO | V 208 - V 210 | ZanelloVMNA4105 | | | | AB3511(P) | 0986B03511 | | | | |
| ZANELLO | | | | HB1000(TR) | 0986B01000 | AB3903 | 0986B03903 | | | | |
| ZANELLO | 220 | MWM | | OB1027 | 0986B01027 | AB3535 | 0986B03535 | DB0200(P) | 0986BF0200 | | |
| ZANELLO | | | | | | AB3904(S) | 0986B03904 | DB0200(S) | 0986BF0200 | | |
| ZANELLO | 220 - 240 | Zanello | | | | | | | | | |
| ZANELLO | 230 CC - 230 DT - 250 CC | Cummins6B-5.9 | | OB1008 | 0986B01008 | AB3535 | 0986B03535 | DB0519(P) | 0986450519 | | |
| ZANELLO | | | | | | AB3904(S) | 0986B03904 | DB0519(S) | 0986450519 | | |
| ZANELLO | | | | | | | | DB0713(SA) | 0986450713 | | |
| ZANELLO | | | | | | | | RB0582 | 0986450582 | | |
| ZANELLO | 230 C | Cummins6B | | OB1008 | 0986B01008 | AB3535 | 0986B03535 | DB0519(P) | 0986450519 | | |
| ZANELLO | | | | OB1027 | 0986B01027 | AB3904(S) | 0986B03904 | DB0519(S) | 0986450519 | | |
| ZANELLO | | | | | | | | DB0713(SA) | 0986450713 | | |
| ZANELLO | 250 DT | Cummins6BT5.9 | | OB1008 | 0986B01008 | AB3515(P) | 0986B03515 | DB0519 | 0986450519 | | |
| ZANELLO | | | | | | | | DB0713(SA) | 0986450713 | | |
| ZANELLO | | | | | | | | RB0582(SR) | 0986450582 | | |
| ZANELLO | P 414 | Perkins6-354F4 | | OB1028 | 0986B01028 | AB3535 | 0986B03535 | DB0695(P) | 0986450695 | | |
| ZANELLO | | | | | | AB3904(S) | 0986B03904 | DB0695(S) | 0986450695 | | |
| ZANELLO | M 415 D | M.BenzOM352A | | OB1565 | 0986B01565 | AB3535 | 0986B03535 | DB0200(P) | 0986BF0200 | | |

| MARCA | VEHÍCULO | MOTOR | FECHA | SC | ACEITE | SC | AIRE | SC | COMBUSTIBLE | SC | HABITÁCULO |
|---|---|---|---|---|---|---|---|---|---|---|---|
| ZANELLO | | | | | | AB3904(S) | 0986B03904 | DB0200(S) | 0986BF0200 | | |
| ZANELLO | C 417 | Caterpillar | | OB1018 | 0986B01018 | | | DB0718 | 0986450718 | | |
| ZANELLO | | | | | | | | | | | |
| ZANELLO | P 417 | Perkins | | OB1028 | 0986B01028 | AB3535 | 0986B03535 | | | | |
| ZANELLO | | | | | | AB3904(S) | 0986B03904 | | | | |
| ZANELLO | 425 C | Caterpillar | | OB1018 | 0986B01018 | AB3535 | 0986B03535 | DB0718 | 0986450718 | | |
| ZANELLO | | | | | | AB3904(S) | 0986B03904 | | | | |
| ZANELLO | 450 | Zanello | | | | | | | | | |
| ZANELLO | 460 C - 480 C | Cummins6BT-5.9 | | OB1008 | 0986B01008 | AB3515(P) | 0986B03515 | DB0519(P) | 0986450519 | | |
| ZANELLO | | | | | | | | DB0519(S) | 0986450519 | | |
| ZANELLO | | | | | | | | DB0713(SA) | 0986450713 | | |
| ZANELLO | | | | | | | | RB0582 | 0986450582 | | |
| ZANELLO | 460 C | Cummins6BT | | OB1008 | 0986B01008 | | | DB0211 | 0986BF0211 | | |
| ZANELLO | | | | OB1027 | 0986B01027 | AB3905(S) | 0986B03905 | DB0713(S) | 0986450713 | | |
| ZANELLO | 500 C | Cummins6CT | | OB1011 | 0986B01011 | AB3535 | 0986B03535 | DB0211 | 0986BF0211 | | |
| ZANELLO | | | | | | AB3904(S) | 0986B03904 | DB0713(S) | 0986450713 | | |
| ZANELLO | | | | | | | | RB0583 | 0986450583 | | |
| ZANELLO | | | | | | | | RB0582 | 0986450582 | | |
| ZANELLO | 500 C | Cummins6CT-8.3 | | OB1011 | 0986B01011 | AB3515(P) | 0986B03515 | DB0519(P) | 0986450519 | | |
| ZANELLO | | | | | | | | DB0519(S) | 0986450519 | | |
| ZANELLO | | | | | | | | DB0713(SA) | 0986450713 | | |
| ZANELLO | | | | | | | | RB0582 | 0986450582 | | |
| ZANELLO | 540 C | Cummins6CTA-8.3 | | OB1011 | 0986B01011 | AB3515(P) | 0986B03515 | DB0519(P) | 0986450519 | | |
| ZANELLO | | | | | | | | DB0519(S) | 0986450519 | | |
| ZANELLO | | | | | | | | DB0713(SA) | 0986450713 | | |
| ZANELLO | | | | | | | | RB0582 | 0986450582 | | |
| ZANELLO | 580 C | Cummins6CTAP-8.3 | | OB1011 | 0986B01011 | AB3536(P) | 0986B03536 | DB0519(P) | 0986450519 | | |
| ZANELLO | | | | | | | | DB0519(S) | 0986450519 | | |
| ZANELLO | | | | | | | | DB0713 | 0986450713 | | |
| ZANELLO | | | | | | | | RB0582 | 0986450582 | | |
| ZANELLO | 700 C | CumminsNT-855A | | OB1011 | 0986B01011 | | | DB0714 | 0986450714 | | |
| ZANELLO | | | | | | | | | | | |
| ZANELLO | | | | | | | | RB0583 | 0986450583 | | |
| ZANELLO | | | | | | | | DB0224(Elem.SA) | 0986BF0224 | | |
| ZANELLO | 700 C | Cummins | | | | | | | | | |
| ZANELLO | | | | | | AB3536(P) | 0986B03536 | RB0583 | 0986450583 | | |
| ZANELLO | | | | | | | | | | | |
| ZANELLO | 900 C | CumminsNTAA400 | | OB1011 | 0986B01011 | | | | | | |
| ZANELLO | | | | | | | | | | | |

| MARCA | VEHÍCULO | MOTOR | FECHA | SC | ACEITE | SC | AIRE | SC | COMBUSTIBLE | SC | HABITÁCULO |
|---|---|---|---|---|---|---|---|---|---|---|---|
| ZANELLO | | | | | | | | DB0713 | 0986450713 | | |
| ZANELLO | | | | | | | | RB0583 | 0986450583 | | |
| ZANELLO | 3304 | Cummins | | | | AB3515(P) | 0986B03515 | DB0519(P) | 0986450519 | | |
| ZANELLO | | | | | | | | DB0519(S) | 0986450519 | | |
| ZANELLO | | | | | | | | DB0713 | 0986450713 | | |
| ZANELLO | 4200 DF | | | OB1018 | 0986B01018 | AB3535 | 0986B03535 | DB0421 | 0986BF0421 | | |
| ZANELLO | | | | | | AB3904(S) | 0986B03904 | | | | |
| ZANELLO | 4200 F | | | OB1565 | 0986B01565 | AB3535 | 0986B03535 | DB0200 | 0986BF0200 | | |
| ZANELLO | | | | | | AB3904(S) | 0986B03904 | | | | |
| ZANELLO | 4200 FF | M.Benz OM352 | | OB1565 | 0986B01565 | AB3535 | 0986B03535 | DB0200(P) | 0986BF0200 | | |
| ZANELLO | | | | | | AB3904(S) | 0986B03904 | DB0200(S) | 0986BF0200 | | |
| ZANELLO | 4200 F 26DE | M.Benz OM352A | | OB1565 | 0986B01565 | AB3535 | 0986B03535 | DB0200 | 0986BF0200 | | |
| ZANELLO | | | | | | AB3904(S) | 0986B03904 | | | | |
| ZANELLO | 4200 F 26DF | | | OB1018 | 0986B01018 | AB3535 | 0986B03535 | DB0421 | 0986BF0421 | | |
| ZANELLO | | | | | | AB3904(S) | 0986B03904 | | | | |
| ZANELLO | 4200 F 26DF | Deutz | | OB1018 | 0986B01018 | AB3535 | 0986B03535 | DB0731 | 0986450731 | | |
| ZANELLO | | | | | | AB3904(S) | 0986B03904 | DB0421(S) | 0986BF0421 | | |
| ZANELLO | 4200 M24 | M.Benz OM352 | | OB1565 | 0986B01565 | AB3535 | 0986B03535 | DB0200(P) | 0986BF0200 | | |
| ZANELLO | | | | | | AB3904(S) | 0986B03904 | DB0200(S) | 0986BF0200 | | |
| ZANELLO | 4200 M26 | M.Benz OM352A | | OB1565 | 0986B01565 | AB3535 | 0986B03535 | DB0200(P) | 0986BF0200 | | |
| ZANELLO | | | | | | AB3904(S) | 0986B03904 | DB0200(S) | 0986BF0200 | | |
| ZANELLO | 4200 P | Perkins 6-354F4 | | OB1028 | 0986B01028 | AB3535 | 0986B03535 | DB0695(P) | 0986450695 | | |
| ZANELLO | | | | | | AB3904(S) | 0986B03904 | DB0695(S) | 0986450695 | | |
| ZANELLO | 4300 F | Perkins | | OB1028 | 0986B01028 | AB3535 | 0986B03535 | | | | |
| ZANELLO | | | | | | AB3904(S) | 0986B03904 | | | | |
| ZANELLO | 4300 F | | | OB1028 | 0986B01028 | AB3535 | 0986B03535 | | | | |
| ZANELLO | | | | | | AB3904(S) | 0986B03904 | | | | |
| ZANELLO | 4400 C | | | OB1565 | 0986B01565 | AB3535 | 0986B03535 | DB0200 | 0986BF0200 | | |
| ZANELLO | | | | | | AB3904(S) | 0986B03904 | | | | |
| ZANELLO | 4400 | Caterpillar | | OB1018 | 0986B01018 | | | DB0718 | 0986450718 | | |

| BOSCH | REEMPLAZOS | AC DELCO | DELPHI | DONALDSON | FIAAM | FLEETGUARD | FRAM | FREU-DEN-BERG | HENGST | MANN | MAHLE | MOTORCRAFT | TECFIL | WEGA | WIX | PURFLUX | PUROLATOR |
|---|---|---|---|---|---|---|---|---|---|---|---|---|---|---|---|---|---|
| 0986 BF0 018 | | 01FBC013 | FF20041 | | | | G5995 | | H 82 WK 01 | WK 58 | KL83 | | GI043 | FCI1660 | 33199 | | F1050 |

| ELEMENTO FILTRANTE DE AIRE/ ELEMENTO FILTRANTE DE AIRE SECUNDARIO | | | | | |
|---|---|---|---|---|---|
| Bosch number | Figura | ø [mm] | H [mm] | a [mm] | b [mm] |
| F026400527 | 5 | | 557,0 | 313,0 | 178,0 |
| F026400327 | | 251,0 | 533,0 | | |
| F026400288 | 5 | 328,0 | 500,0 | | |
| F026400223 | 2 | | 60,0 | 177,0 | 166,0 |
| F026400157 | 2 | | 58,0 | 322,0 | 128,0 |
| F026400151 | 2 | | 43,0 | 359,0 | 147,0 |
| F026400145 | 5 | | 464,0 | 313,0 | 177,6 |
| F026400114 | 2 | | 54,0 | 239,0 | 175,0 |
| F026400098 | 2 | | 44,0 | 230,0 | 197,0 |
| ● F026400086 | 5 | | 557,0 | 313,0 | 178,0 |
| ● F026400083 | 5 | | 464,0 | 313,0 | 177,6 |
| F026400080 | 5 | 314,0 | 421,0 | | |
| F026400078 | 5 | 327,0 | 468,0 | | |
| ● F026400077 | 5 | 328,0 | 500,0 | | |
| F026400054 | 2 | | 54,00 | 170,00 | 147,00 |
| F026400044 | 2 | | 46,0 | 252,0 | 172,0 |
| F026400037 | 2 | | 43,0 | 231,0 | 144,0 |
| F026400017 | 2 | | 51,0 | 289,0 | 150,0 |
| F026400010 | 2 | | 92,0 | 206,0 | 170,0 |
| F026400007 | 2 | | 67,0 | 312,0 | 188,0 |
| 0986B03908 | 6 | 159,0 | 471,5 | | |
| 0986B03907 | 6 | 139,0 | 478,0 | | |
| 0986B03906 | 6 | 150,0 | 380,0 | | |
| 0986B03905 | 6 | 120,0 | 381,0 | | |
| 0986B03904 | 6 | 110,0 | 376,0 | | |
| 0986B03903 | 6 | 90,0 | 344,0 | | |
| 0986B03902 | 6 | 80,0 | 326,5 | | |
| 0986B03901 | 6 | 69,5 | 284,0 | | |
| 0986B03575 | 2 | | 59,0 | 361,0 | 81,0 |
| 0986B03574 | 2 | | 57,0 | 316,0 | 262,0 |
| 0986B03573 | 2 | | 37,5 | 299,0 | 193,0 |
| 0986B03571 | 5 | 241,5 | 120,0 | | |
| 0986B03570 | 2 | | 58,0 | 213,4 | 203,0 |
| 0986B03566 | 5 | 158,0 | 269,0 | | |
| ● 0986B03556 | 1 | 257,0 | 60,5 | | |
| ● 0986B03555 | 3 | 242,0 | 498,0 | | |
| 0986B03554 | 5 | 163,0 | 181,0 | | |
| 0986B03553 | 5 | 155,0 | 149,0 | | |
| ● 0986B03551 | 4 | 161,0 | 290,0 | – | – |

| ELEMENTO FILTRANTE DE AIRE/ ELEMENTO FILTRANTE DE AIRE SECUNDARIO | | | | | |
|---|---|---|---|---|---|
| Bosch number | Figura | ø [mm] | H [mm] | a [mm] | b [mm] |
| ● 0986B03544 | 5 | 164,0 | 258,0 | – | – |
| ● 0986B03540 | 5 | 301,0 | 379,0 | – | – |
| 0986B03537 | 5 | 264,5 | 405,0 | – | – |
| 0986B03536 | 5 | 301,0 | 475,0 | – | – |
| 0986B03535 | 5 | 196,8 | 376,0 | – | – |
| 0986B03534 | 5 | 126,7 | 295,0 | – | – |
| 0986B03531 | 5 | 174,0 | 392,5 | – | – |
| 0986B03526 | 5 | 148,0 | 338,0 | – | – |
| ● 0986B03524 | 4 | 190,0 | 314,0 | – | – |
| ● 0986B03523 | 5 | 352,0 | 410,5 | – | – |
| ● 0986B03522 | 5 | 366,0 | 417,5 | – | – |
| 0986B03521 | 5 | 310,0 | 370,0 | | |
| ● 0986B03520 | 5 | 264,5 | 408,0 | – | – |
| 0986B03519 | 5 | 202,0 | 419,5 | – | – |
| 0986B03515 | 5 | 242,0 | 498,0 | – | – |
| ● 0986B03514 | 3 | 241,5 | 498,0 | – | – |
| 0986B03513 | 5 | 226,0 | 382,0 | – | – |
| ● 0986B03512 | 5 | 126,5 | 369,0 | – | – |
| 0986B03511 | 5 | 164,0 | 352,0 | – | – |
| 0986B03509 | 3 | 301,0 | 475,0 | – | – |
| 0986B03506 | 5 | 126,5 | 220,0 | – | – |
| ● 0986B03505 | 4 | 155,0 | 205,0 | – | – |
| ● 0986B03504 | 5 | 156,5 | 197,5 | – | – |
| ● 0986B03502 | 3 | 133,5 | 291,0 | – | – |
| ● 0986B03501 | 3 | 224,0 | 103,0 | – | – |
| ● 0986B03500 | 3 | 219,5 | 142,0 | – | – |
| 0986B03409 | 6 | 67,0 | 301,0 | | |
| 0986B03408 | 6 | 104,0 | 378,0 | | |
| 0986B03407 | 6 | 147,5 | 414,0 | | |
| 0986B03406 | 6 | 144,0 | 422,0 | | |
| 0986B03405 | 6 | 93,00 | 370,0 | | |
| 0986B03403 | 6 | 116,0 | 382,0 | | |
| 0986B03402 | 6 | 86,0 | 353,0 | | |
| 0986B03401 | 6 | 184,0 | 503,0 | | |
| 0986B03400 | 6 | 77,0 | 343,0 | | |
| 0986B03300 | | 174,5 | 422 | | |
| 0986B03014 | 1 | 270 | 160 | | |
| 0986B03013 | 1 | 222 | 140 | | |
| 0986B03012 | 1 | 225 | 175 | | |

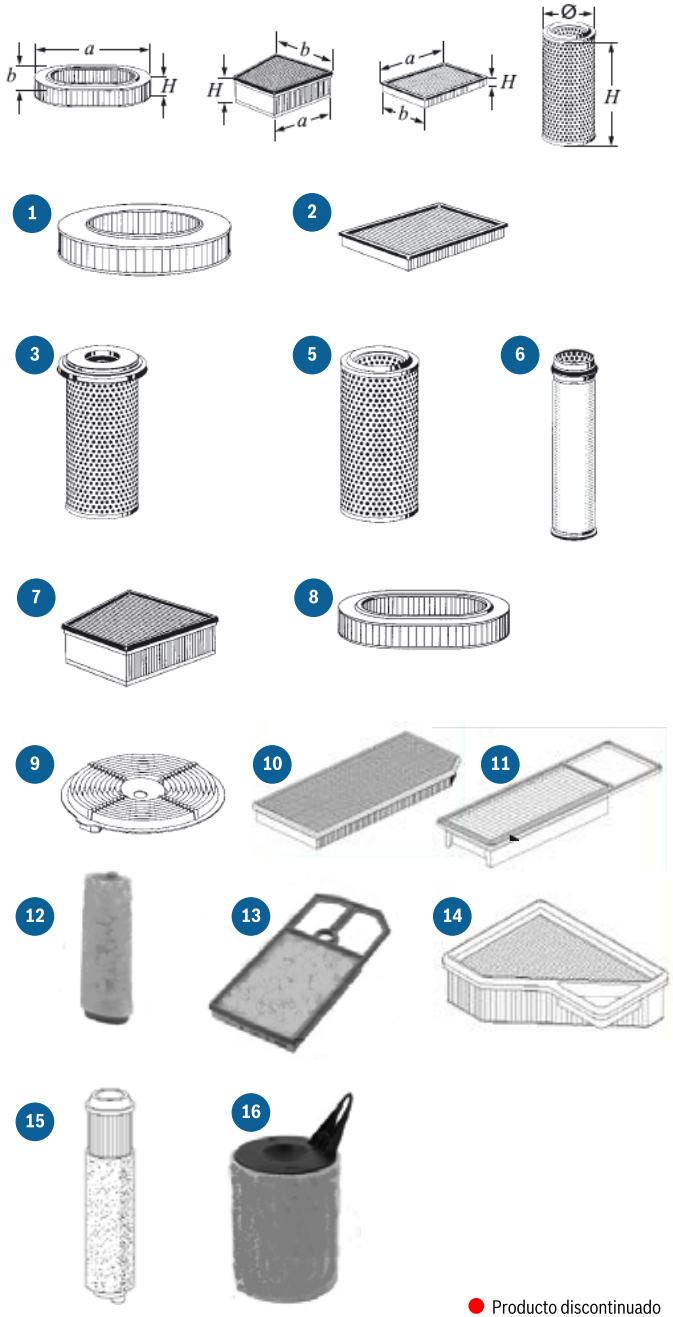


● Producto discontinuado

| ELEMENTO FILTRANTE DE AIRE/ ELEMENTO FILTRANTE DE AIRE SECUNDARIO | | | | | |
|---|---|---|---|---|---|
| Bosch number | Figura | ø [mm] | H [mm] | a [mm] | b [mm] |
| 0986B03011 | 5 | 273 | 350 | | |
| 0986B03010 | 5 | 266,0 | 537,0 | – | – |
| ● 0986B03009 | 5 | 155,0 | 346,0 | – | – |
| 0986B03008 | 5 | 205,0 | 433,0 | – | – |
| 0986B03007 | 5 | 108,0 | 309,0 | – | – |
| 0986B03006 | 5 | 221,0 | 403,0 | – | – |
| 0986B03004 | 5 | 155,0 | 380,0 | – | – |
| 0986B03003 | 5 | 263,0 | 408,5 | – | – |
| 0986B03002 | 5 | 145,0 | 365,0 | – | – |
| 0986B03001 | 5 | 192,0 | 403,0 | – | – |
| 0986B02538 | 2 | | 58,0 | 235,00 | 162,00 |
| 0986B02537 | 2 | | 57,0 | 360,00 | 265,00 |
| 0986B02533 | 2 | | 34,5 | 282,00 | 298,00 |
| 0986B02532 | 2 | | 33,5 | 231,00 | 116,00 |
| 0986B02530 | 2 | | 51,0 | 242,00 | 171,00 |
| 0986B02528 | 2 | | 38,0 | 335,50 | 167,00 |
| 0986B02527 | 2 | | 33,5 | 231,00 | 136,00 |
| 0986B02518 | 2 | | 56,0 | 334,00 | 100,00 |
| 0986B02517 | 2 | | 44,0 | 218,00 | 118,00 |
| 0986B02516 | 11 | | 50,0 | 211,00 | 365,00 |
| 0986B02515 | 2 | | 40,0 | 145,00 | 357,00 |
| 0986B02514 | 7 | | 60,0 | 206,00 | 192,00 |
| 0986B02513 | 2 | | 57,5 | 190,00 | 245,00 |
| 0986B02512 | 7 | | 57,5 | 164,00 | 200,00 |
| 0986B02511 | 2 | | 38,0 | 325,00 | 144,00 |
| 0986B02510 | 13 | | 56,0 | 275,00 | 109,00 |
| 0986B02509 | 2 | | 46,0 | 339,00 | 205,00 |
| 0986B02508 | 2 | | 26,0 | 190,00 | 225,00 |
| 0986B02507 | 2 | | 34,0 | 255,00 | 247,00 |
| 0986B02506 | 2 | | 58,0 | 370,00 | 83,00 |
| 0986B02505 | 2 | | 58,0 | 316,00 | 115,00 |
| 0986B02504 | 2 | – | 70,0 | 314,00 | 259,00 |
| 0986B02503 | 13 | | 65,0 | 382,0 | 140,0 |
| 0986B02502 | 1 | 293,0 | 52,0 | | |
| ● 0986B02501 | 2 | | 58,0 | 277,0 | 180,0 |
| 0986B02500 | 2 | | 80,0 | 206,0 | 169,5 |
| 0986B02383 | 13 | | 40,0 | 377,0 | 190 |
| 0986B02382 | 2 | | 57,0 | 322,0 | 97,0 |
| 0986B02381 | 2 | | 58,0 | 323,0 | 240,0 |

| ELEMENTO FILTRANTE DE AIRE/ ELEMENTO FILTRANTE DE AIRE SECUNDARIO | | | | | |
|---|---|---|---|---|---|
| Bosch number | Figura | ø [mm] | H [mm] | a [mm] | b [mm] |
| 0986B02380 | 2 | | 65,0 | 290,0 | 203,0 |
| 0986B02379 | 2 | | 30,0 | 205,0 | 192,0 |
| 0986B02378 | 2 | | 51,0 | 350,0 | 222,0 |
| 0986B02377 | 2 | | 40,0 | 420,0 | 130,0 |
| 0986B02376 | 2 | | 66,0 | 212,0 | 162,0 |
| 0986B02374 | 2 | | 66,0 | 212,0 | 162,0 |
| 0986B02373 | 2 | | 65,0 | 350,0 | 102,0 |
| 0986B02371 | 7 | | 62,0 | 216,0 | 218,0 |
| 0986B02369 | 2 | | 65,0 | 245,0 | 185,0 |
| 0986B02356 | 2 | – | 43,0 | 248,0 | 193,0 |
| 0986B02354 | 2 | | 60,0 | 440,00 | 95,00 |
| 0986B02345 | 2 | | 44,0 | 341,0 | 91,0 |
| 0986B02344 | 2 | | 57,0 | 337,0 | 134,0 |
| 0986B02343 | 2 | | 57,0 | 325,0 | 156,0 |
| 0986B02342 | 2 | | 42,0 | 313,0 | 102,0 |
| 0986B02341 | 2 | | 41,0 | 316,0 | 262,0 |
| 0986B02340 | 2 | | 58,0 | 312,0 | 150,0 |
| 0986B02339 | 2 | | 49,0 | 297,0 | 102,0 |
| 0986B02338 | 2 | | 46,5 | 304,5 | 118,0 |
| 0986B02337 | 2 | | 47,0 | 290,0 | 135,0 |
| 0986B02336 | 2 | | 57,0 | 271,0 | 118,0 |
| 0986B02335 | 2 | | 65,0 | 266,0 | 125,0 |
| 0986B02334 | 2 | | 57,0 | 211,0 | 166,0 |
| 0986B02333 | 2 | | 72,0 | 175,0 | 140,0 |
| 0986B02332 | 7 | – | 70,0 | 213,0 | 218,0 |
| 0986B02331 | 2 | | 57,0 | 184,0 | 77,0 |
| 0986B02328 | 2 | | 43,0 | 280 | 157 |
| 0986B02325 | 2 | | 29,5 | 413,0 | 129,0 |
| 0986B02324 | 2 | | 40,0 | 286,0 | 188 |
| 0986B02323 | 2 | | 58,0 | 267,0 | 145,0 |
| 0986B02322 | 2 | | 42,0 | 255,0 | 219 |
| 0986B02321 | 2 | | 45,0 | 286,0 | 155,0 |
| 0986B02320 | 2 | | 47,0 | 253,0 | 177 |
| 0986B02319 | 2 | | 58,5 | 258,0 | 184 |
| 0986B02318 | 2 | | 43,0 | 338,0 | 206 |
| 0986B02317 | 2 | | 42,0 | 292,5 | 154 |
| 0986B02316 | 2 | | 59,0 | 257,0 | 213 |
| 0986B02314 | 2 | – | 39,0 | 185,0 | 133,0 |
| 0986B02313 | 2 | | 37,0 | 210,0 | 165,5 |

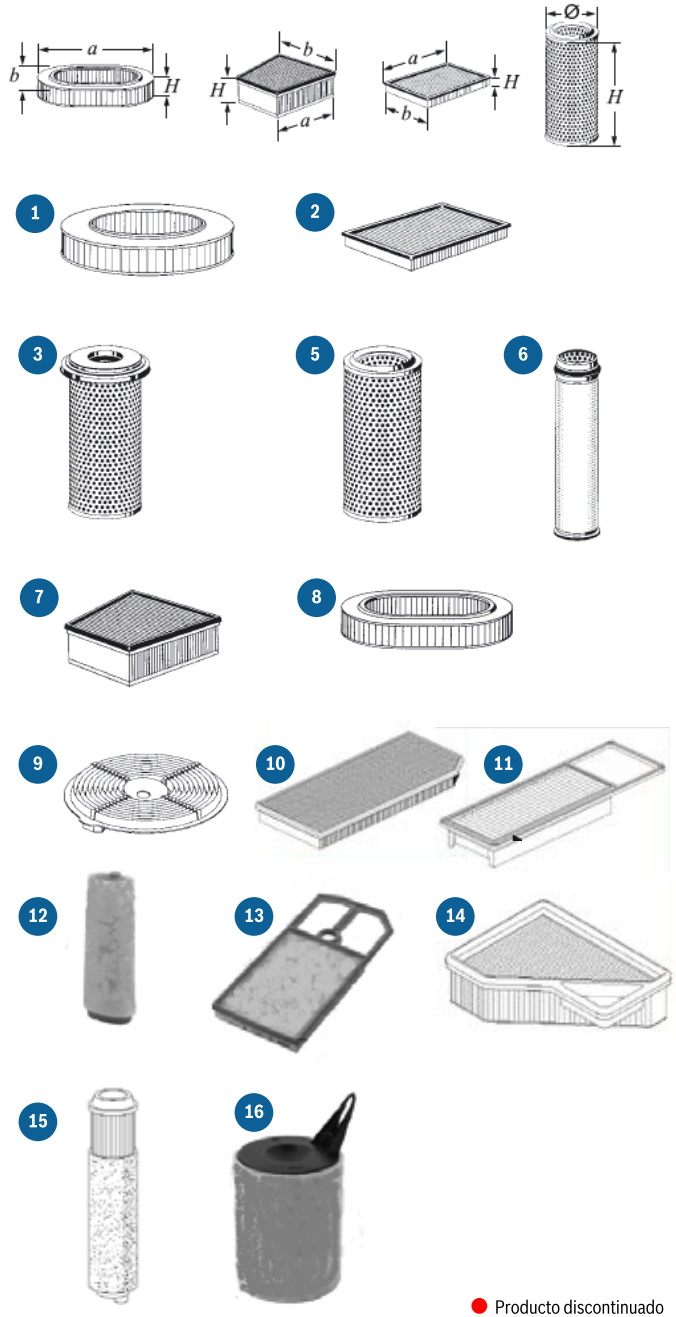


● Producto discontinuado

| ELEMENTO FILTRANTE DE AIRE/ ELEMENTO FILTRANTE DE AIRE SECUNDARIO | | | | | |
|---|---|---|---|---|---|
| Bosch number | Figura | ø [mm] | H [mm] | a [mm] | b [mm] |
| 0986B02312 | 2 | | 79,0 | 205,0 | 170 |
| 0986B02311 | 2 | – | 57,0 | 275,0 | 184,0 |
| 0986B02310 | 2 | | 50,0 | 359,0 | 184 |
| 0986B02309 | 2 | | 57,0 | 263,5 | 228,5 |
| 0986B02308 | 2 | – | 49,0 | 285,0 | 163,0 |
| 0986B02307 | 2 | | 50,0 | 254 | 190 |
| 0986B02306 | 2 | | 39,0 | 228,0 | 198 |
| 0986B02305 | 2 | | 44,0 | 245,0 | 181 |
| ● 0986B02304 | 2 | | 48,5 | 245,0 | 167 |
| 0986B02303 | 2 | | 59,0 | 240,0 | 133,0 |
| ● 0986B02301 | 2 | | 54,0 | 172,0 | 137,0 |
| 0986B02051 | 2 | | 50,0 | 285,0 | 152,0 |
| 0986B02052 | 1 | 220,0 | 95,0 | | |
| 0986B02053 | 2 | | 57,0 | 366,0 | 133,0 |
| 0986B02042 | 2 | | 59,0 | 280,0 | 180,0 |
| 0986B02041 | 5 | 150,00 | 210,0 | | |
| 0986B02037 | 2 | | 50,00 | 246,00 | 169,00 |
| 0986B02034 | 1 | 314,0 | 62,0 | | |
| ● 0986B02033 | 1 | 317,5 | 25,0 | | |
| ● 0986B02032 | 1 | 275,0 | 105,0 | | |
| 0986B02031 | 1 | 278,0 | 57,0 | | |
| 0986B02030 | 1 | 264,0 | 63,0 | | |
| 0986B02028 | 1 | 248,0 | 63,0 | | |
| 0986B02027 | 1 | 229 | 64 | | |
| 0986B02026 | 6 | 170,0 | 123,0 | | |
| 0986B02025 | 6 | 168,0 | 124,0 | | |
| 0986B02024 | 6 | 160,0 | 177,0 | | |
| ● 0986B02023 | 1 | 114 | 142 | | |
| 0986B02022 | 6 | 138,0 | 210,0 | | |
| 0986B02021 | 6 | 130,0 | 268,0 | | |
| 0986B02020 | 5 | 117 | 135 | | |
| ● 0986B02019 | 6 | 114,0 | 243,0 | | |
| 0986B02018 | 1 | 279,5 | 63,0 | – | – |
| 0986B02017 | 1 | 260,0 | 52,0 | – | – |
| 0986B02016 | 2 | | 58,0 | 206,0 | 169,5 |
| 0986B02014 | 5 | 127,0 | 312,0 | – | – |
| 0986B02009 | 1 | 262,0 | 58,0 | – | – |
| ● 0986B02006 | 5 | 123,5 | 283,0 | – | – |
| 0986B02005 | 5 | 125,0 | 206,0 | – | – |

| ELEMENTO FILTRANTE DE AIRE/ ELEMENTO FILTRANTE DE AIRE SECUNDARIO | | | | | |
|---|---|---|---|---|---|
| Bosch number | Figura | ø [mm] | H [mm] | a [mm] | b [mm] |
| 0986B02002 | 1 | 205,0 | 58,0 | – | – |
| ● 0986AF2180 | 1 | 222,0 | 174,0 | | |
| 1987429051 | 2 | | 31,0 | 278,0 | 167,0 |
| ● 1987429608 | 6 | 137,0 | 393,0 | | |
| 1987429607 | 6 | 139,0 | 288,0 | | |
| 1987429606 | 2 | | 50,0 | 405,0 | 200 |
| ● 1987429605 | 5 | 202,0 | 318,5 | | |
| ● 1987429604 | 5 | 178,0 | 132,5 | | |
| 1987429603 | 5 | 127,0 | 219,0 | | |
| 1987429602 | 2 | | 61,0 | 222,0 | 192,0 |
| ● 1987429406 | 7 | | 58,0 | 243,0 | 192,0 |
| 1987429404 | 2 | | 70,0 | 345,0 | 136,0 |
| 1987429191 | 11 | | 41,0 | 332,0 | 109,0 |
| 1987429190 | 2 | | 61,0 | 392,0 | 186,0 |
| 1987429189 | 2 | | 41,0 | 291,0 | 211,0 |
| 1987429183 | 2 | | 58,0 | 317,0 | 163,0 |
| 1987429135 | 2 | – | 43,0 | 309,0 | 155,0 |
| 1987429181 | 2 | | 34,0 | 276,0 | 168,0 |
| 1987429180 | 2 | | 34,0 | 298,0 | 237,0 |
| 1457429078 | 2 | | 42,0 | 254,0 | 214,0 |
| ● 1457433961 | 2 | | 39,0 | 208,0 | 153,0 |
| 1457433958 | 2 | – | 43,0 | 266,0 | 171,0 |
| 1457433956 | 2 | – | 55,0 | 230,0 | 201,0 |
| 1457433955 | 2 | – | 46,0 | 190,0 | 200,0 |
| ● 1457433904 | 6 | 303,0 | 526,0 | | |
| 1457433792 | 2 | | 58,0 | 260,0 | 150,0 |
| 1457433772 | 2 | | 69,0 | 254,0 | 212,5 |
| 1457433771 | 2 | | 58,0 | 242,0 | 188,0 |
| 1457433769 | 2 | | 57,0 | 271,0 | 118,0 |
| 1457433753 | 2 | | 68,0 | 331,0 | 266,0 |
| 1457433752 | 2 | – | 58,0 | 228,0 | 294,0 |
| 1457433751 | 2 | – | 46,0 | 235,0 | 201,0 |
| 1457433750 | 2 | – | 57,0 | 312,0 | 149,0 |
| 1457433747 | 2 | | 58,0 | 279,0 | 218,0 |
| 1457433744 | 5 | 156,0 | 256,0 | | |
| 1457433743 | 2 | | 58,0 | 214,0 | 141,0 |
| 1457433742 | 2 | | 59,0 | 312,0 | 211,0 |
| 1457433740 | 2 | | 42,0 | 340,0 | 206,0 |
| 1457433735 | 5 | 243,0 | 298,0 | | |

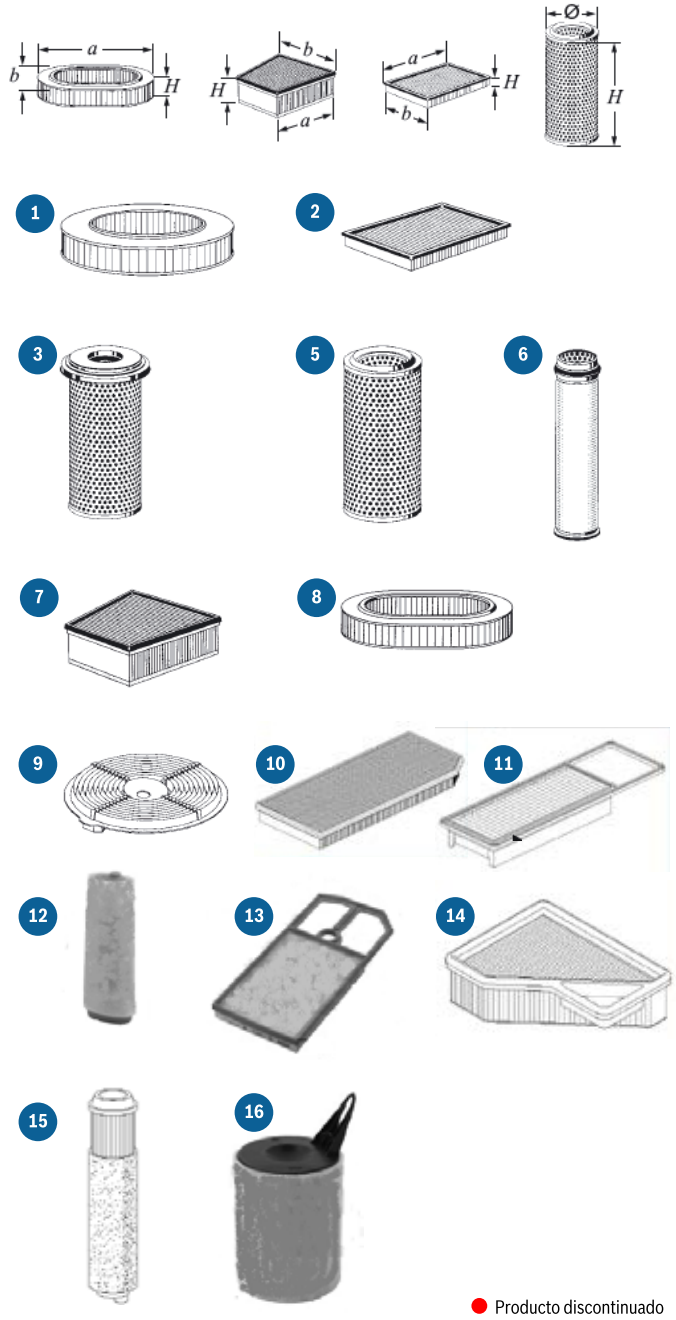


● Producto discontinuado

| ELEMENTO FILTRANTE DE AIRE/ ELEMENTO FILTRANTE DE AIRE SECUNDARIO | | | | | |
|---|---|---|---|---|---|
| Bosch number | Figura | ø [mm] | H [mm] | a [mm] | b [mm] |
| 1457433725 | 3 | 188,0 | 381,0 | | |
| 1457433716 | 2 | – | 32,0 | 417,0 | 187,0 |
| 1457433715 | 4 | 123,0 | 150,0 | – | – |
| 1457433711 | 2 | – | 49,0 | 200,0 | 140,0 |
| 1457433700 | 2 | – | 44,0 | 333,0 | 157,0 |
| 1457433699 | 2 | – | 58,0 | 336,0 | 150,0 |
| 1457433697 | 2 | – | 42,0 | 235,0 | 236,0 |
| 1457433634 | 5 | 308,0 | 473,0 | | |
| 1457433623 | 2 | – | 43,0 | 297,0 | 87,0 |
| 1457433616 | 2 | | 41,0 | 393,0 | 160,0 |
| 1457433608 | 2 | – | 57,0 | 369,0 | 150,0 |
| 1457433607 | 2 | | 58,0 | 283,0 | 171,0 |
| 1457433605 | 2 | | 41,0 | 256,0 | 177,0 |
| 1457433602 | 2 | – | 27,0 | 306,0 | 228,0 |
| 1457433602 | 2 | – | 27,0 | 306,0 | 228,0 |
| 1457433601 | 2 | | 61,0 | 598,0 | 171,0 |
| 1457433591 | 2 | | 59,0 | 358,0 | 152,0 |
| 1457433588 | 12 | 89,0 | 377,0 | | |
| 1457433555 | 7 | | 58,0 | 272,0 | 202,0 |
| 1457433540 | 1 | 278,0 | 62,0 | | |
| 1457433539 | 2 | | 50,0 | 186,0 | 140,0 |
| ● 1457433537 | 2 | | 58,0 | 287,0 | 258,0 |
| 1457433527 | 7 | | 58,0 | 318,0 | 175,0 |
| ● 1457433517 | 5 | 201,0 | 190,0 | | |
| 1457433513 | 2 | | 42,5 | 294,0 | 223 |
| 1457433512 | 2 | | 40,5 | 248,0 | 211 |
| 1457433325 | 2 | | 57,0 | 336,0 | 102,0 |
| 1457433306 | 2 | | 34,0 | 217 | 168,0 |
| 1457433272 | 2 | – | 39,0 | 345,0 | 170,0 |
| 1457433270 | 5 | 154,0 | 345,0 | | |
| ● 1457433266 | 2 | | 58,0 | 265,0 | 154,0 |
| 1457433263 | 2 | | 58,0 | 282,0 | 159,0 |
| 1457433261 | 2 | | 57,0 | 211,0 | 184,0 |
| 1457433260 | 2 | – | 57,0 | 323,0 | 100,0 |
| 1457433260 | 2 | – | 57,0 | 323,0 | 100,0 |
| 1457433253 | 2 | – | 39,0 | 247,0 | 180,0 |
| 1457433253 | 2 | – | 39,0 | 247,0 | 180,0 |
| 1457433227 | 5 | 140,0 | 164,0 | | |
| 1457433163 | 2 | | 57,0 | 377,0 | 83,0 |

| ELEMENTO FILTRANTE DE AIRE/ ELEMENTO FILTRANTE DE AIRE SECUNDARIO | | | | | |
|---|---|---|---|---|---|
| Bosch number | Figura | ø [mm] | H [mm] | a [mm] | b [mm] |
| 1457433161 | 5 | 130,0 | 207,0 | | |
| 1457433160 | 2 | | 58,0 | 318,0 | 114,0 |
| 1457433159 | 2 | – | 70,0 | 336,0 | 102,0 |
| 1457433158 | 2 | | 41,0 | 336,0 | 102,0 |
| 1457433154 | 5 | 136,0 | 231,0 | | |
| 1457433152 | 2 | – | 55,0 | 271,0 | 261,0 |
| 1457433150 | 2 | | 68,0 | 244,0 | 169,0 |
| 1457433102 | 10 | | 37,0 | 405,0 | 173,0 |
| 1457433100 | 14 | | 47,0 | 215,0 | 165,0 |
| ● 1457433090 | 2 | – | 50,0 | 246,0 | 168,0 |
| 1457433076 | 2 | | 49,0 | 382,0 | 140,0 |
| 1457433047 | 2 | | 50,0 | 340,0 | 143,0 |
| 1457433046 | 2 | | 70,0 | 267,0 | 213,0 |
| 1457433007 | 2 | – | 27,0 | 308,0 | 229,0 |
| 1457433004 | 2 | – | 58,0 | 243,0 | 178,0 |
| 1457433002 | 2 | | 58,0 | 228,0 | 221,0 |
| 1457432290 | 6 | 134,5 | 310,0 | | |
| 1457432289 | 5 | 200,0 | 392,0 | | |
| 1457432288 | 5 | 270,0 | 428,0 | | |
| 1457432287 | 5 | 173,0 | 292,0 | | |
| 1457432286 | 5 | 125,0 | 321,0 | | |
| ● 1457432285 | 5 | 150,00 | 221,00 | | |
| 1457432284 | 5 | 301,0 | 535,0 | | |
| 1457432283 | 5 | 303,0 | 512,0 | | |
| 1457432282 | 5 | 168,0 | 286,5 | | |
| 1457432281 | 2 | | 80,5 | 316,0 | 277 |
| ● 1457432280 | 5 | 237,0 | 312,0 | | |
| ● 1457432202 | 2 | | 27,0 | 336,0 | 230,0 |
| 1457432111 | 1 | 235,0 | 58,0 | | |
| 1457429992 | 1 | 369,0 | 60,0 | | |
| 1457429988 | 2 | | 61,0 | 472,0 | 158,0 |
| 1457429987 | 2 | | 46,0 | 285,0 | 213,0 |
| 1457429970 | 1 | 408,0 | 84,0 | – | – |
| 1457429957 | 2 | – | 42,0 | 273,0 | 134,0 |
| 1457429954 | 1 | 282,0 | 52,0 | | |
| 1457429953 | 1 | 240,0 | 49,0 | | |
| 1457429933 | 4 | 134,0 | 290,0 | | |
| 1457429875 | 2 | | 58,0 | 288,00 | 171,00 |
| 1457429871 | 1 | 331,0 | 52,0 | | |

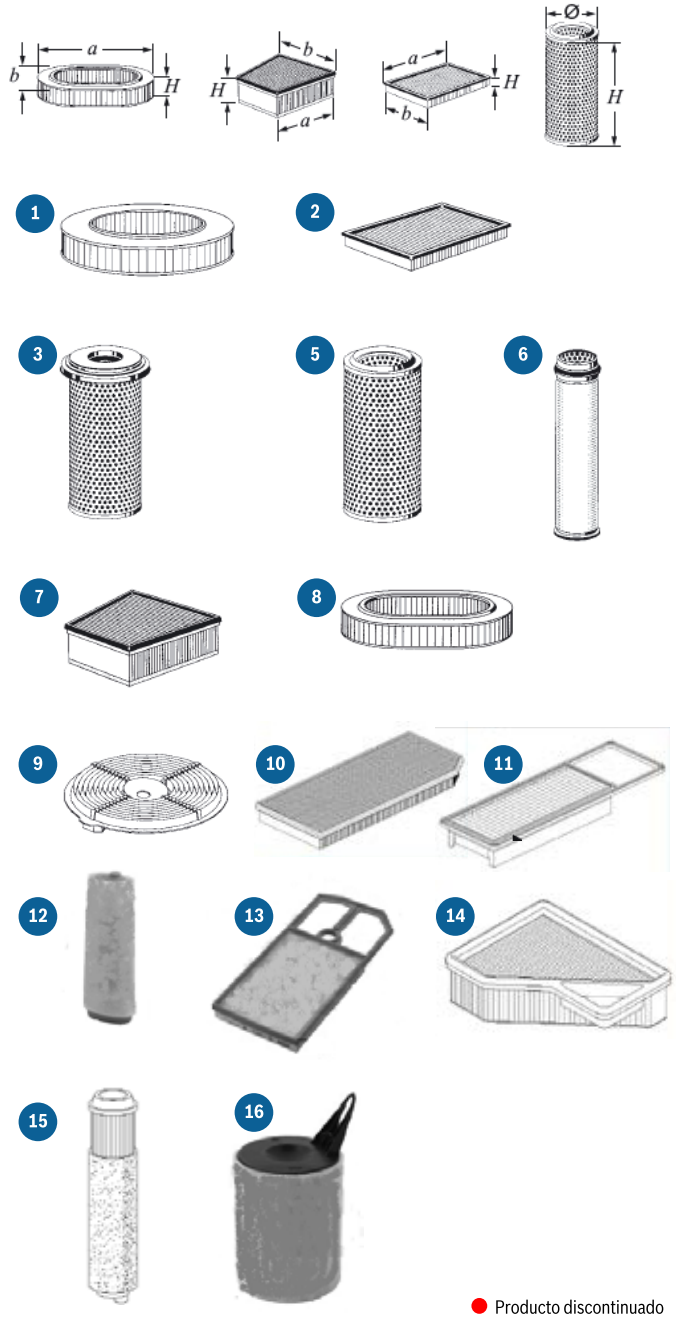


● Producto discontinuado

| ELEMENTO FILTRANTE DE AIRE/ ELEMENTO FILTRANTE DE AIRE SECUNDARIO | | | | | |
|---|---|---|---|---|---|
| Bosch number | Figura | ø [mm] | H [mm] | a [mm] | b [mm] |
| 1457429839 | 5 | 118,0 | 200,0 | | |
| 1457429787 | 1 | 408,0 | 56,0 | – | – |
| 1457429783 | 2 | – | 58,0 | 380,0 | 171,0 |
| 1457429777 | 2 | – | 57,0 | 308,0 | 184,0 |
| 1457429775 | 1 | 291,0 | 48,0 | | |
| 1457429076 | 2 | – | 41,0 | 334,0 | 134,0 |
| 1457429063 | 1 | | | 256,0 | 71,0 |
| 1457433042 | 5 | 310,0 | 465,0 | | |
| 1457433069 | 15 | 106,0 | 332,0 | | |
| 1457433275 | 5 | 134,0 | 176,0 | | |
| ● 1457433560 | 3 | 346,0 | 344,0 | | |
| 1457433573 | 7 | | 58,0 | 192,0 | 243,0 |
| 1457433585 | 2 | | 50,0 | 174,0 | 207,0 |
| F026400018 | 16 | 142,0 | 200,0 | | |
| F026400043 | 2 | | 46,0 | 180,0 | 224,0 |
| 1457433338 | 2 | | 38,0 | 188,0 | 254,0 |
| 1457433075 | 2 | | 58,0 | 193,0 | 231,0 |
| F026400499 | 5 | 248,0 | 310,0 | | |
| F026400441 | 7 | | 58,0 | 243,0 | 192,0 |
| ● F026400074 | 5 | 248,0 | 310,0 | | |
| 1457433594 | 2 | | 46,0 | 182,0 | 395,0 |
| F026400029 | 16 | | 173,6 | 176,0 | |
| 1457433094 | 10 | | 46,0 | 295,0 | 231,0 |
| F026400109 | 7 | | 70,2 | 300,0 | 240,0 |

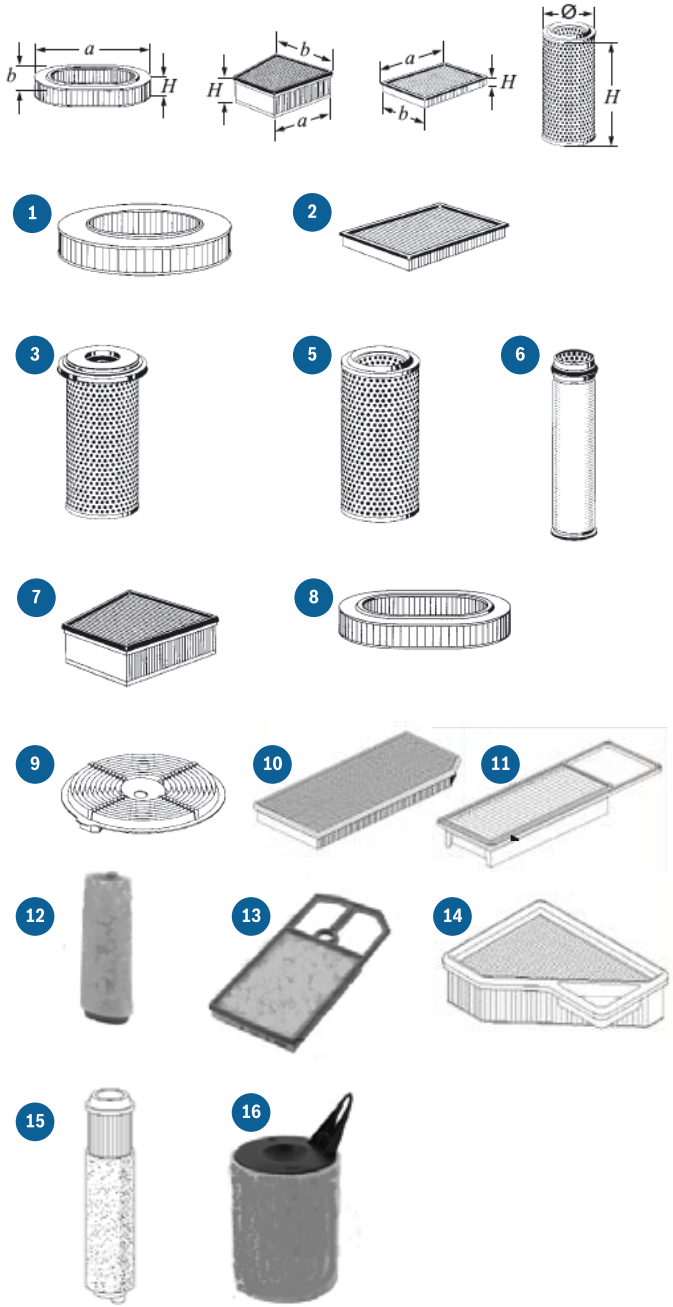


● Producto discontinuado

| Elemento filtrante para aceite lubricante | | | |
|---|---|---|---|
| Bosch number | Figura | ø [mm] | H [mm] |
| 0986B01569 | 7 | 83,0 | 213,0 |
| 0986B01567 | 2 | 70,0 | 114,0 |
| 0986B01565 | 2 | 122,8 | 229,0 |
| 0986B01562 | 6 | 120,0 | 193,0 |
| 0986B01561 | 6 | 120,0 | 270,0 |
| 0986B01557 | 7 | 83,0 | 152,0 |
| 0986B01556 | 2 | 84,0 | 196,0 |
| 0986B01555 | 2 | 84,0 | 134,0 |
| 0986B01554 | 2 | 108,0 | 242,0 |
| ● 0986B01551 | 2 | 84,0 | 196,0 |
| ● 0986B01502 | 5 | 110,0 | 204,0 |
| ● 0986B01501 | 5 | 196,0 | 381,0 |
| ● 0986B01500 | 5 | 110,0 | 126,0 |
| 0986B00500 | 10 | 56,0 | 91,0 |
| 0986B00701 | 2 | 52,0 | 87,0 |
| 0986B00702 | 7 | 75,0 | 84,0 |
| 0986B00705 | 7 | 66,0 | 69,0 |
| 0986B00706 | | 69,0 | 102,0 |
| 0986B00707 | 7 | 69,0 | 154,0 |
| 0986B00708 | 8 | 70,0 | 141,0 |
| 0986B00709 | 7 | 63,0 | 126,0 |
| 0986B00710 | 2 | 91,0 | 95,0 |
| 0986B00711 | 7 | 65,0 | 100,0 |
| 0986B00712 | 7 | 62,0 | 72,0 |
| 0986B00713 | 7 | 64,0 | 162,0 |
| 0986B00714 | 7 | 64,0 | 115,0 |
| 0986B00715 | 7 | 62,0 | 57,0 |
| 1457429760 | 2 | 83,0 | 89,0 |
| 1457429638 | 2 | 81,0 | 110,0 |
| 1457429616 | 5 | 71,0 | 153,0 |
| 1457429610 | 5 | 83,0 | 121,0 |
| 1457429606 | 2 | 59,0 | 106,0 |
| 1457429306 | 10 | 57,0 | 89,0 |
| 1457429301 | 10 | 65,0 | 73,0 |
| 1457429278 | 2 | 83,0 | 169,0 |
| 1457429275 | 2 | 82,0 | 124,0 |
| 1457429274 | 3 | 92,0 | 169,0 |
| 1457429252 | 7 | 64,0 | 153,0 |
| 1457429244 | 7 | 64,0 | 125,0 |

| Elemento filtrante para aceite lubricante | | | |
|---|---|---|---|
| Bosch number | Figura | ø [mm] | H [mm] |
| 1457429239 | 9 | 91,0 | 53,0 |
| 1457429199 | 7 | 72,0 | 92,0 |
| 1457429196 | 2 | 63,0 | 115,0 |
| 1457429193 | 7 | 59,0 | 141,0 |
| 1457429157 | 7 | 64,0 | 115,0 |
| 1457429152 | 7 | 70,0 | 195,0 |
| 1457429147 | 7 | 53,0 | 78,0 |
| 1457429142 | 7 | 83,0 | 110,0 |
| 1457429141 | 7 | 83,0 | 162,0 |
| 1457429139 | 7 | 82,0 | 160,0 |
| 1457429128 | 7 | 118,0 | 313,0 |
| 1457429122 | 2 | 62,0 | 160,0 |
| 1457429121 | 2 | 83,0 | 162,0 |
| 1457429118 | 7 | 68,0 | 79,0 |
| 1457429119 | 2 | 64,0 | 115,0 |
| 1457429116 | 2 | 64,0 | 115,0 |
| 1457429108 | 7 | 65,0 | 103,0 |
| 1457429102 | 7 | 83,0 | 104,0 |
| 0986B00500 | | | |
| F026407002 | 11 | 76,0 | 200,0 |
| 1457429256 | 12 | 65,0 | 77,0 |
| 1457429257 | 7 | 62,0 | 73,0 |
| 1457429269 | 7 | 74,0 | 79,0 |
| 1457429272 | | 52,5 | 116,00 |
| F026404008 | 13 | | 74,0 |
| F026404006 | 4 | 70,0 | 105,0 |
| F026407071 | 2 | 65,0 | 83,0 |
| F026407042 | 10 | 113,0 | 250,0 |
| F026407008 | 2 | 71,0 | 95,00 |
| F026407006 | 7 | 57,0 | 105,00 |

| Filtro secador de aire | | | |
|---|---|---|---|
| Bosch number | Figura | ø [mm] | H [mm] |
| ● F026404012 | | 140,0 | 165,0 |
| 0986628250 | | 140,0 | 165,0 |
| | | | |
| | | | |

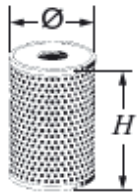

● Producto discontinuado

| Elemento filtrante para sistema hidráulico | | | |
|---|---|---|---|
| Bosch number | Figura | ø [mm] | H [mm] |
| 0986B01652 | 2 | 59,0 | 100,0 |
| ● 0986B01750 | 2 | 72,7 | 93,8 |

2

| Filtro Blindado para Aceite lubricante | | | | | | |
|---|---|---|---|---|---|---|
| Bosch number | Figura | ø [mm] | H [mm] | Rosca | Válv. de retención [bar] | Válv. de alivio [bar] |
| F026407049 | 1 | 110,0 | 213,0 | M30 x 2,0 | | 2,50 |
| F026407048 | 1 | 108,0 | 228,0 | M30 x 2,0 | | |
| F026407005 | 1 | 80,0 | 80,0 | 3/4" 16UNF | | |
| 0986B01576 | 2 | 50,0 | 151,0 | | | |
| 0986B01043 | 1 | 118,0 | 302,0 | 2 1/4-12 UNS | | |
| 0986B01038 | 1 | 96,0 | 142,0 | 3/4" 16UNF | 0,12 | 2,50 |
| 0986B01035 | 1 | 97,0 | 95,0 | M22 x 1,5 | 0,12 | 0,80 |
| ● 0986B01031 | 1 | 109,6 | 182,0 | 3/4" x 16UNF-2B | 0,12 | 2,00 |
| 0986B01028 | 1 | 92,7 | 176,0 | 3/4" x 16UNF-2B | 0,12 | 0,40 |
| 0986B01027 | 1 | 93,2 | 208,5 | 1" x 12UNF-2B | 0,12 | 2,20 |
| 0986B01026 | 1 | 92,7 | 111,0 | 3/4" x 16UNF-2B | 0,12 | 0,40 |
| 0986B01025 | 1 | 92,7 | 138,0 | 3/4" x 16UNF-2B | 0,12 | 0,40 |
| ● 0986B01023 | 1 | 109,6 | 182,0 | 1" x 12UNF-2B | s/ válvula | 2,00 |
| 0986B01020 | 1 | 109,6 | 260,0 | 1 3/8" x 16UN | s/ válvula | s/ válvula |
| 0986B01018 | 1 | 109,6 | 272,0 | 1 1/8" x 16UN | s/ válvula | s/ válvula |
| 0986B01016 | 1 | 138,0 | 93,0 | 1 1/2" x 16UN-2B | 0,12 | 1,00 |
| 0986B01015 | 1 | 109,6 | 232,0 | 1" x 12UNF-2B | 0,12 | 1,00 |
| 0986B01014 | 1 | 109,6 | 151,0 | 3/4" x 16UNF-2B | 0,12 | 2,00 |
| 0986B01012 | 1 | 109,6 | 182,0 | 1" x 12UNF-2B | s/ válvula | s/ válvula |
| 0986B01011 | 1 | 119,2 | 300,0 | 2 1/4" x 12UN | s/ válvula | s/ válvula |
| 0986B01010 | 1 | 92,7 | 138,0 | 1 x 16UN-2B | s/ válvula | s/ válvula |
| 0986B01009 | 1 | 118,5 | 209,5 | 1 1/2" x 12UNF-2B | s/ válvula | s/ válvula |
| 0986B01008 | 1 | 92,7 | 176,0 | 1 x 16UN-2B | s/ válvula | s/ válvula |
| 0986B01007 | 1 | 118,5 | 250,0 | 1 3/8" x 16UN-2B | s/ válvula | s/ válvula |
| 0986B01005 | 1 | 92,7 | 138,0 | 13/16" x 16UNF-2B | s/ válvula | 1,40 |
| 0986B01004 | 1 | 92,7 | 115,0 | M23 x 1,5 | s/ válvula | 2,50 |
| 0986B01003 | 1 | 92,7 | 95,0 | 3/4" x 16UNF-2B | 0,12 | 0,40 |
| 0986B01001 | 1 | 109,0 | 145,5 | 3/4" x 16UNF-2B | 0,12 | 2,00 |
| 0986B01000 | 1 | 92,7 | 138,0 | 1 x 12UNF-2B | 0,12 | 2,20 |
| 0986B00513 | 1 | 69,0 | 65,0 | M20 x 1,5 | | 1,50 |
| 0986B00512 | 1 | 75,0 | 80,0 | 3/4 x 16 UNF | 0,12 | 1,00 |
| 0986B00511 | 1 | 93,00 | 171,00 | M 27 x 2 | | |
| 0986B00510 | 1 | 93,00 | 96,00 | M 20 x 1,5 | | |
| 0986B00065 | 1 | 62,30 | 68,40 | 3/4" x 16UNF-2B | | |
| 0986B00064 | 1 | 76,20 | 78,50 | 3/4" x 16UNF-2B | | |
| 0986B00063 | 1 | 77,00 | 90,00 | 3/4" x 16UNF-2B | | |
| 0986B00057 | 1 | 97,00 | 97,00 | 3/4 x 16 UNF | 0,12 | 1,40 |
| 0986B00056 | 1 | 97,00 | 71,00 | M20 x 1,5 | 0,12 | 1,40 |
| 0986B00055 | 1 | 79,00 | 130,00 | 3/4" 16UNF | 0,12 | 1,12 |

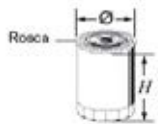


1

2

3

● Producto discontinuado

**Filtro Blindado para Aceite lubricante**

| Bosch number | Figura | ø [mm] | H [mm] | Rosca | Válv. de retención [bar] | Válv. de alivio [bar] |
|---|---|---|---|---|---|---|
| 0986B00037 | 1 | 90,0 | 88,0 | M18 x 1,5 | 0,12 | |
| 0986B00036 | 1 | 90,0 | 75,0 | M20 x 1,5 | | |
| 0986B00035 | 1 | 78,0 | 56,0 | 3/4" 16UNF | 0,12 | 0,90 |
| ● 0986B00034 | 1 | 93,0 | 139,0 | M20 x 1,5 | | |
| 0986B00033 | 1 | 80,0 | 100,0 | 3/4" 16UNF | 0,12 | 1,00 |
| 0986B00032 | 1 | 78,0 | 73,0 | M16 x 1,5 | 0,12 | 1,50 |
| 0986B00030 | 1 | 96,0 | 100,0 | 3/4" 16UNF | 0,12 | 1,40 |
| 0986B00028 | 1 | 77,5 | 78,0 | 3/4" x 16UNF-2B | s/ válvula | s/ válvula |
| 0986B00026 | 1 | 92,7 | 138,0 | 13/16" x 16UN-2B | s/ válvula | s/ válvula |
| ● 0986B00024 | 1 | 79,5 | 88,0 | M20 x 1,5 | 0,12 | 1,10 |
| 0986B00023 | 1 | 67,0 | 61,5 | M20 x 1,5 | 0,12 | 1,10 |
| 0986B00021 | 1 | 75,7 | 76,7 | M18 x 1,5 | s/ válvula | s/ válvula |
| ● 0986B00020 | 1 | 92,7 | 109,6 | M18 x 1,5 | s/ válvula | s/ válvula |
| 0986B00019 | 1 | 75,7 | 85,0 | 3/4" x 16UNF-2B | 0,12 | 2,00 |
| 0986B00018 | 1 | 75,7 | 118,5 | 3/4" x 16UNF-2B | 0,12 | 2,00 |
| 0986B00017 | 1 | 75,7 | 118,5 | 3/4" x 16UNF-2B | 0,12 | 2,00 |
| 0986B00016 | 1 | 75,7 | 98,0 | 3/4" x 16UNF-2B | 0,12 | 2,00 |
| 0986B00015 | 1 | 67,0 | 88,0 | M20 x 1,5 | 0,12 | 1,10 |
| 0986B00014 | 1 | 92,7 | 95,0 | 3/4" x 16UNF-2B | 0,12 | 0,40 |
| 0986B00013 | 1 | 75,7 | 102,0 | M20 x 1,5 | 0,12 | 2,00 |
| 0986B00011 | 1 | 92,7 | 138,0 | M26 x 1,5 | 0,12 | 2,20 |
| 0986B00010 | 1 | 96,0 | 175,5 | M20 x 1,5 | 0,12 | 0,40 |
| ● 0986B00009 | 1 | 75,7 | 148,5 | M20 x 1,5 | 0,12 | 0,40 |
| 0986B00008 | 1 | 109,6 | 151,0 | M20 x 1,5 | s/ válvula | 1,00 |
| ● 0986B00007 | 1 | 108,5 | 82,0 | M20 x 1,5 | s/ válvula | 1,00 |
| 0986B00006 | 1 | 92,7 | 95,0 | M20 x 1,5 | 0,12 | 0,40 |
| 0986B00004 | 1 | 75,7 | 116,5 | 3/4" x 16UNF-2B | 0,12 | 2,00 |
| 0986B00003 | 1 | 75,7 | 140,0 | 3/4" x 16UNF-2B | 0,12 | 0,40 |
| 0986B00002 | 1 | 77,5 | 88,0 | M20 x 1,5 | 0,12 | 0,40 |
| 0986452003 | 1 | 95,0 | 93,0 | 3/4" 16UNF | 0,12 | 1,00 |
| ● 0986452046 | 1 | 94,0 | 121,0 | 1" 12UNF | 0,12 | |
| 0986452354 | 1 | 77,5 | 77,5 | M20 x 1,5 | 0,12 | 0,40 |
| 0986452350 | 1 | 67,0 | 74,5 | 3/4" x 16UNF-2B | 0,12 | 0,40 |
| 0986452058 | 1 | 69,0 | 66,0 | 3/4" 16UNF | 0,12 | 1,00 |
| 0986452064 | 1 | 94,0 | 122,0 | M26 x 1,56H | 0,12 | 1,00 |
| 0986452062 | 1 | 103,0 | 127,0 | M24 x 1,5 | c/ válvula | 1,00 |
| ● 0986452061 | 1 | 70,0 | 66,0 | M20 x 1,5 | 0,12 | 1,00 |
| 0986452028 | 1 | 68,0 | 76,0 | 3/4" 16UNF | | 1,0 |
| 0451403200 | 1 | 110,0 | 213,0 | M30 x 2,0 | 0,12 | 2,50 |

**Filtro Blindado para Aceite lubricante**

| Bosch number | Figura | ø [mm] | H [mm] | Rosca | Válv. de retención [bar] | Válv. de alivio [bar] |
|---|---|---|---|---|---|---|
| 0451403001 | 1 | 110,0 | 273,0 | 11/8" 16UNF | 0,12 | 2,50 |
| 0451203236 | 1 | 96,0 | 143,0 | 3/4" 16UNF | 0,12 | 2,50 |
| 0451203220 | 1 | 95,0 | 175,0 | 1" 12UNF | 0,12 | 2,50 |
| 0451104026 | 1 | 80,0 | 93,0 | 13/16" 16UNF | | 1,0 |
| 0451103365 | 1 | 103,0 | 98,0 | M24 x 1,5 | | |
| 0451103363 | 1 | 79,0 | 93,0 | 3/4" x 16UNF | | |
| 0451103354 | 1 | 80,0 | 79,0 | M20 x 1,5 | 0,12 | 1,20 |
| 0451103351 | 1 | 80,0 | 79,0 | 3/4" x 16UNF | 0,12 | 1,50 |
| 0451103341 | 1 | 96,0 | 78,0 | 13/16" x 16UNF | s/ válvula | 1,00 |
| 0451103333 | 1 | 96,0 | 100,0 | M22 x 1,5 | 0,12 | 1,0 |
| 0451103332 | 1 | 75,7 | 53,0 | M20 x 1,5 | 0,12 | 2,00 |
| 0451103325 | 1 | 92,7 | 138,0 | 3/4" x 16UNF-2B | 0,12 | 0,40 |
| 0451103324 | 1 | 75,7 | 127,5 | M18 x 1,5 | 0,12 | s/ válvula |
| 0451103323 | 1 | 92,7 | 75,5 | 3/4" x 16UNF-2B | 0,12 | 0,40 |
| 0451103322 | 1 | 75,7 | 94,0 | 3/4" x 16UNF-2B | 0,12 | 1,10 |
| 0451103321 | 1 | 75,7 | 78,5 | 3/4" x 16UNF-2B | 0,12 | 1,10 |
| 0451103313 | 1 | 96,0 | 114,0 | 3/4" x 16UNF | 0,12 | 3,00 |
| 0451103311 | 1 | 96,0 | 77,0 | 13/16" 16 UNF | | 1,0 |
| 0451103309 | 1 | 76,0 | 89,0 | 3/4 x 16 UNF | | |
| 0451103300 | 1 | 76,0 | 67,0 | M20 x 1,5 | | 1,19 |
| 0451103299 | 1 | 80,0 | 89,0 | M20 x 1,5 | 0,12 | 0,80 |
| 0451103297 | 1 | 80,0 | 79,0 | M18 x 1,5 | s/ válvula | s/ válvula |
| 0451103290 | 1 | 90,0 | 119,0 | 3/4" 16UNF | 0,12 | 2,50 |
| 0451103276 | 1 | 68,0 | 90,0 | 3/4" 16UNF | 0,12 | 1,0 |
| 0451103271 | 1 | 76,0 | 80,0 | 3/4" x 16UNF | c/ válvula | 0,60 |
| 0451103260 | 1 | 96,0 | 100,0 | M20 x 1,5 | 0,12 | 1,50 |
| 0451103258 | 1 | 80,0 | 123,0 | 3/4" x 16UNF | 0,12 | 2,50 |
| 0451103240 | 1 | 90,0 | 119,0 | M20 x 1,5 | 0,12 | 0,70 |
| 0451103105 | 1 | 80,0 | 123,0 | 3/4" x 16UNF | 0,12 | s/ válvula |
| 0451103105 | 1 | 80,0 | 123,0 | 3/4" x 16UNF | 0,12 | s/ válvula |
| F026407060 | 3 | 93,0 | 116,0 | | | |
| F026407080 | 1 | 78,0 | 142,0 | | | |
| 0451104010 | 1 | 110,0 | 260,0 | 1 1/8" x 16 UNF | | |
| 0451104520 | 1 | 86,0 | 139,0 | M20 x 1,5 | | |
| F026407210 | 1 | 70,0 | 66,0 | M20 x 1,5 | 0,12 | 1,00 |
| F026407181 | 1 | 78,0 | 79,0 | 3/4 x 16 UNF | 0,12 | 2 |
| ● F026407079 | 1 | 78,0 | 79,0 | 3/4 x 16 UNF | 0,12 | 2,00 |
| F026407018 | 1 | 89,0 | 116,0 | 3/4 x 16 UNF | | |
| F026407017 | 1 | 76,0 | 94,0 | M 20 x 1,5 | 1,20 | 1,00 |

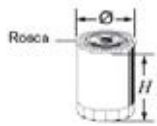


1

2

3

● Producto discontinuado

| Filtro blindado para refrigeracion | | | | |
|---|---|---|---|---|
| **Bosch number** | **Figura** | **ø [mm]** | **H [mm]** | **Rosca** |
| 0986450581 | 1 | 96,0 | 174,0 | 11/16" x 16UN |
| 0986450582 | 1 | 96,0 | 110,0 | 11/16" x 16UN |
| 0986450583 | 1 | 96,0 | 136,0 | 11/16" x 16UN |

| Filtro blindado para sistema hidraulico | | | | | | |
|---|---|---|---|---|---|---|
| **Bosch number** | **Figura** | **ø [mm]** | **H [mm]** | **Rosca** | **Válv. de retención [bar]** | **Válv. de alivio [bar]** |
| 0986B01907 | 1 | 92,7 | 176,0 | 1 1/8" x 16UN | s/ válvula | 0,40 |

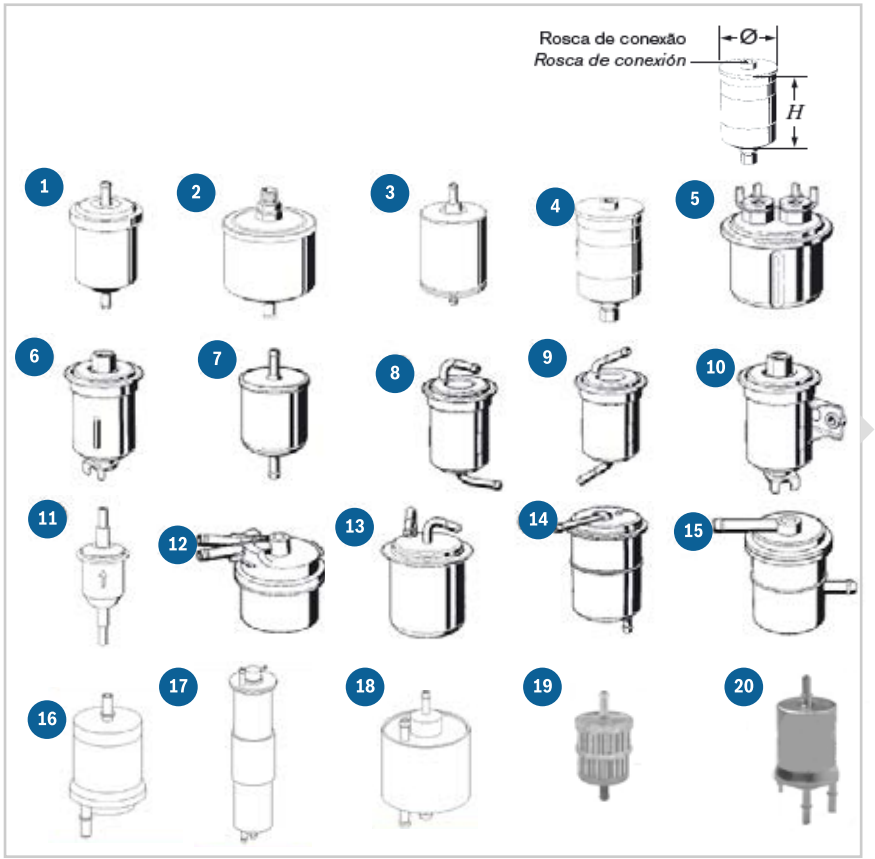


| Filtro para inyección electrónica | | | | | |
|---|---|---|---|---|---|
| **Bosch number** | **Figura** | **ø [mm]** | **H [mm]** | **Conexión de entrada** | **Conexión de salida** |
| F026403009 | 1 | 55,0 | 183,0 | 8,0 | 8,0 |
| F026403006 | 19 | 61,0 | 164,0 | 8,0 | 8,0 |
| 0986BF0026 | 1 | 82,0 | 179,0 | 8,0 | 8,0 |
| 0986BF0025 | 1 | 55,0 | 192,0 | 8,0 | 8,0 |
| 0986BF0024 | 3 | 63,0 | 143,0 | 7,9 | 7,9 |
| 0986BF0023 | 1 | 66,5 | 167,5 | 9,6 | 9,6 |
| 0986BF0018 | 7 | 64,0 | 162,5 | 8,0 | 8,0 |
| ● 0986BF0011 | 1 | 55,0 | 192,0 | 8,0 | 8,0 |
| 0986BF0008 | 20 | 48,0 | 126,0 | 6/8 | 6/8 |
| 0986450240 | 7 | 64,0 | 138,0 | 9,2 | 9,5 |
| 0986450239 | 1 | 82,0 | 179,0 | 8,0 | 9,5 |
| 0986450238 | 7 | 64,0 | 138,0 | 9,2 | 11,2 |
| ● 0986450236 | 7 | 75,0 | 178,0 | 8,0 | 8,0 |
| ● 0986450234 | 7 | 82,8 | 157,5 | 9,5 | 9,5 |
| 0986450230 | 1 | 50,0 | 175,0 | 9,5 | 9,5 |
| 0986450154 | 7 | 82,0 | 173,0 | 8,0 | 8,0 |
| 0986450144 | 1 | 82,0 | 179,0 | 9,5 | 9,5 |
| 0986450115 | 6 | 55,0 | 114,0 | M14 x 1,5 | M12 x 1,25 |
| 0450915003 | 18 | 75,0 | 160,0 | 8,0 | 8,0 |
| 0450915001 | 18 | 75,0 | 131,0 | 8,0 | 8,0 |
| 0450905969 | 7 | 59,0 | 160,0 | 8,0 | 8,0 |
| 0450905959 | 19 | 62,0 | 163,0 | 8,0 | 8,0 |
| 0450905952 | 17 | 55,0 | 315,0 | 8,0 | 8,0 |
| 0450905939 | 7 | 56,0 | 180,0 | 8,0 | 8,0 |
| 0450905925 | 16 | 61,0 | 150,0 | 8,0 | 8,0 |
| 0450905916 | 6 | 75,0 | 104,0 | M14 x 1,5 | M12 x 1,25 |
| 0450905913 | 3 | 55,0 | 140,0 | 8,0 | 8,0 |
| 0450905911 | 4 | 56,0 | 114,0 | M14 x 1,5 | M14 x 1,5 |
| 0450905908 | 1 | 86,0 | 210,0 | 8,0 | 8,0 |
| 0450905906 | 4 | 75,0 | 125,0 | M14 x 1,5 | M12 x 1,5 |
| 0450905905 | 3 | 60,0 | 300,0 | 8,0 | 8,0 |
| 0450905904 | 3 | 62,0 | 128,0 | 8,0 | 8,0 |
| 0450905903 | 3 | 81,0 | 158,0 | 8,0 | 8,0 |
| 0450905901 | 3 | 55,0 | 203,0 | 8,0 | 8,0 |
| 0450905601 | 4 | 88,0 | 152,0 | M14 x 1,5 | M12 x 1,5 |
| 0450905324 | 7 | 80,0 | 138,0 | 8,0 | 8,0 |
| 0450905318 | 1 | 75,0 | 174,0 | 8,0 | 8,0 |
| 0450905275 | 3 | 75,0 | 151,0 | 8,0 | 8,0 |
| 0450905264 | 3 | 75,0 | 164,0 | 8,0 | 8,0 |

● Producto discontinuado

| Filtro para inyección electrónica | | | | | |
|---|---|---|---|---|---|
| **Bosch number** | **Figura** | **ø [mm]** | **H [mm]** | **Conexión de entrada** | **Conexión de salida** |
| 0450905216 | 3 | 88,0 | 195,0 | 8,0 | 8,0 |
| 0450905203 | 4 | 80,0 | 148,0 | M14 x 1,5 | M12 x 1,5 |
| 0450905201 | 3 | 74,0 | 151,0 | 9,0 | 9,0 |
| 0450905200 | 4 | 81,0 | 152,0 | M14 x 1,5 | M12 x 1,5 |
| 0450905177 | 4 | 86,0 | 169,0 | M12 x 1,5 | M14 x 1,5 |
| 0450905095 | 1 | 81,0 | 158,0 | 8,0 | 8,0 |
| 0450905087 | 4 | 74,0 | 129,0 | M12 x 1,5 | M14 x 1,5 |
| 0450905021 | 4 | 62,0 | 135,0 | M12 x 1,5 | M14 x 1,5 |
| ● 0450905005 | 4 | 64,0 | 130,0 | M14 x 1,5 | M12 x 1,5 |
| 0450904058 | 1 | 30,0 | 104,0 | 8,0 | 8,0 |
| 0450902161 | 1 | 62,0 | 143,0 | 8,0 | 8,0 |
| 0450902151 | 1 | 65,0 | 123,0 | 8,0 | 8,0 |
| ´0450905927 | 3 | 74,5 | 165,5 | 8,0 | 8,0 |

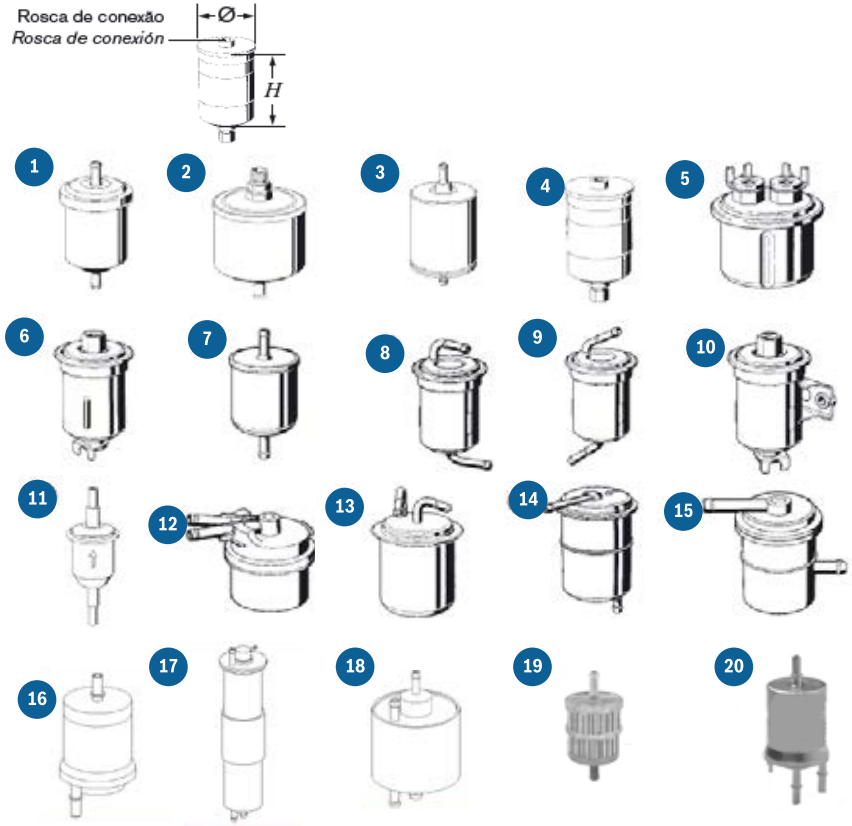


● Producto discontinuado

| Elemento Filtrante para combustible Diesel | | | |
|---|---|---|---|
| **Bosch number** | **Figura** | **ø [mm]** | **H [mm]** |
| ● F026402008 | 7 | 84,0 | 116,0 |
| F026402007 | | 65,0 | 113,0 |
| F026402006 | 9 | 78,0 | 136,0 |
| 0986BF0423 | 7 | 80,0 | 66,0 |
| 0986BF0251 | 7 | 89,0 | 110,0 |
| 0986BF0250 | 7 | 83,0 | 181,0 |
| 0986BF0249 | 8 | 76,0 | 82,0 |
| 0986BF0248 | 8 | 76,0 | 106,0 |
| 0986BF0247 | 7 | 84,0 | 87,0 |
| 0986BF0231 | 6 | 69,6 | 87,0 |
| ● 0986BF0225 | 2 | 65,0 | 103,0 |
| 0986BF0211 | 2 | 65,0 | 53,0 |
| 0986BF0210 | 2 | 69,5 | 92,0 |
| 0986BF0209 | 12 | 83,1 | 75,2 |
| 0986BF0208 | 10 | 64,5 | 77,5 |
| 0986BF0207 | 11 | 95,5 | 80,0 |
| 0986BF0205 | 2 | 69,0 | 50,5 |
| 0986BF0204 | 10 | 67,0 | 60,0 |
| 0986BF0201 | 6 | 92,0 | 103,0 |
| 0986BF0200 | 5 | 57,8 | 115,0 |
| 0986BF0027 | 7 | 91,0 | 75,0 |
| 0986AF6100 | 7 | 75,0 | 79,0 |
| 1457436042 | 6 | | |
| 1457436033 | 6 | 53,0 | 95,0 |
| 1457436006 | 6 | 65,0 | 99,0 |
| 1457431720 | 6 | 65,0 | 96,0 |
| 1457431715 | 6 | 83,0 | 142,0 |
| 1457431708 | 6 | 82,0 | 123,0 |
| 1457431704 | 6 | 77,0 | 90,0 |
| 1457431028 | 2 | 65,0 | 53,0 |
| 1457429656 | 2 | 71,0 | 92,0 |
| 1457429655 | 2 | 106,0 | 203,0 |
| 1457429185 | 2 | 63,0 | 155,0 |
| 1457429165 | 2 | 81,0 | 120,0 |
| 1457070013 | 7 | 84,0 | 116,0 |
| 1457070001 | 8 | 67,0 | 105,0 |
| 0986450704 | 4 | 59,0 | 115,0 |
| 0986450703 | 4 | 84,0 | 145,0 |
| 0986450702 | 4 | 70,0 | 115,0 |

| Elemento Filtrante para combustible Diesel | | | |
|---|---|---|---|
| **Bosch number** | **Figura** | **ø [mm]** | **H [mm]** |
| 0986450701 | 5 | 110,0 | 113,0 |
| 0986450696 | 5 | 81,9 | 145,0 |
| 1457429354 | 4 | 84,0 | 145,0 |
| F026402062 | 8 | 78,0 | 95,0 |

● Producto discontinuado

| Filtro Blindado para Combustible Diesel | | | | | | |
|---|---|---|---|---|---|---|
| **Bosch number** | **Figura** | **ø [mm]** | **H [mm]** | **Rosca** | **Conexión de entrada** | **Conexión de salida** |
| F026402068 | 11 | 56,0 | 250,0 | | | |
| F026402035 | 1 | 96,0 | 212,0 | M16 x 1,5 | | |
| F026402034 | 1 | 111,0 | 167,0 | M16 x 1,5 | | |
| 0986BF0471 | 9 | 88,0 | 195,0 | | 8,0 | 8,0 |
| ● 0986BF0462 | 7 | 96,0 | 248,0 | 1" x 14UNS-2B | – | – |
| 0986BF0421 | 19 | 85,0 | 102,5 | | | |
| 0986BF0420 | 19 | 85,0 | 71,5 | | | |
| 0986BF0405 | 8 | 97,0 | 155,0 | | 8,0 | 8,0 |
| 0986BF0401 | 8 | 86,0 | 139,0 | | 8,0 | 8,0 |
| 0986BF0400 | 9 | 81,0 | 147,0 | – | 8,0 | 8,0 |
| 0986BF0401 | 1 | | | | | |
| 0986BF0369 | 1 | 96,0 | 214,0 | 1" 12UNF | | |
| 0986BF0368 | 1 | 93,0 | 174,0 | M20 x 1.5 | | |
| 0986BF0366 | 15 | 80,0 | 171,0 | | | |
| 0986BF0365 | 8 | 89,0 | 173,0 | | | |
| 0986BF0315 | 15 | 80,0 | 184,0 | | | |
| 0986BF0312 | 7 | 98,0 | 192,0 | M14 x 1,5 | | |
| 0986BF0311 | 15 | 80,0 | 184,0 | | | |
| 0986BF0309 | 7 | 78,0 | 137,0 | M16 x 1,5 | | |
| 0986BF0308 | 8 | 80,0 | 139,0 | – | 8,0 | 8,0 |
| 0986BF0307 | 1 | 75,7 | 88,5 | 3/4" x 16UNF-2B | – | – |
| 0986BF0306 | 8 | 85,0 | 147,0 | – | 8,0 | 8,0 |
| ● 0986BF0302 | 1 | 93,2 | 210,5 | 1" x 14UNS-2B | – | – |
| ● 0986BF0238 | 1 | 96,0 | 144,0 | M24 x 1,5 | | |
| 0986BF0237 | 1 | 93,0 | 142,0 | M24 x 1,5 | | |
| 0986BF0236 | 1 | 93,0 | 244,0 | 1-14 UNS // M8 x 1,5 | | |
| 0986BF0235 | 1 | 93,0 | 246,0 | 1-14 UNS | | |
| 0986BF0234 | 1 | 93,0 | 155,0 | 3/4-16UNF// M36 x 1,5 | | |
| 0986BF0232 | 1 | 108,0 | 146,0 | 1-14 UNS | | |
| 0986BF0230 | 1 | 93,0 | 176,0 | 7/8"X14UNF-2B | | |
| 0986BF0224 | 1 | 98,0 | 156,0 | 1" 14UNF | | |
| 0986BF0223 | 1 | 111,0 | 145,0 | 1" 12UNF | | |
| 0986BF0222 | 1 | 111,0 | 145,0 | 1" 14UNF | | |
| 0986BF0221 | 1 | 111,0 | 145,0 | 1" 14UNF | | |
| 0986BF0220 | 1 | 111,0 | 119,0 | 1" 14UNF | | |
| 0986BF0219 | 1 | 111,0 | 89,0 | 1" 14UNF | | |
| 0986BF0218 | 1 | 97,0 | 156,0 | 1" 14UNF | | |
| 0986BF0217 | 1 | 97,0 | 106,0 | 1" 14UNF | | |
| 0986BF0216 | 1 | 97,0 | 106,0 | 1" 14UNF | | |

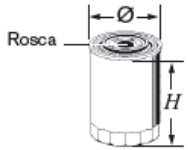


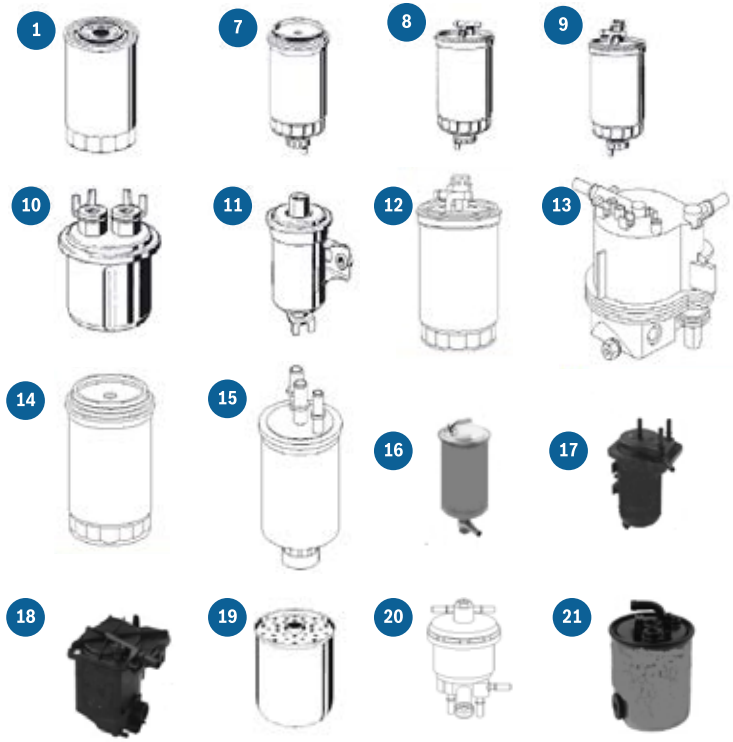


● Producto discontinuado

| Filtro Blindado para Combustible Diesel | | | | | | |
|---|---|---|---|---|---|---|
| Bosch number | Figura | ø [mm] | H [mm] | Rosca | Conexión de entrada | Conexión de salida |
| 0986BF0215 | 1 | 97,0 | 142,0 | 1" 14UNF | | |
| 0986BF0214 | 1 | 111,0 | 166,0 | 1" 12 UNF | | |
| 0986BF0213 | 1 | 111,0 | 166,0 | 1" 12 UNF | | |
| 0986BF0212 | 1 | 111,0 | 166,0 | 1" 14UNF | | |
| 0986BF0206 | 19 | 71,0 | 86,0 | | | |
| 0450906508 | 15 | 86,0 | 187,0 | | 9,8 | 9,8 |
| 1457434440 | 14 | 73,0 | 122,0 | | | |
| 1457434421 | 1 | 96,0 | 144,0 | M18 x 1,5 | | |
| ● 1457434402 | 7 | 98,0 | 192,0 | M14 x 1,5 | | |
| ● 1457434400 | 7 | 90,0 | 128,0 | M14 x 1,5 | | |
| 1457434314 | 1 | 83,0 | 142,0 | M16 x 1,5 | | |
| 1457434310 | 1 | 83,0 | 169,0 | M16 x 1,5 | | |
| 1457434294 | 1 | 93,0 | 212,0 | M18 x 1,5 | | |
| 1457434293 | 7 | 83,0 | 182,0 | M16 x 1,5 | | |
| 1457434291 | 7 | 80,0 | 111,0 | M16 x 1,5 | | |
| 1457434194 | 7 | 83,0 | 157,0 | M16 x 1,5 | | |
| 1457434187 | 7 | 84,0 | 185,0 | M16 x 1,5 | | |
| 1457434184 | 7 | 84,0 | 183,0 | M16 x 1,5 | | |
| 1457434180 | 1 | 94,0 | 175,0 | 1" 14 UNF | | |
| 1457434123 | 1 | 84,0 | 100,0 | M12 x 1,5 | | |
| 1457434103 | 7 | 85,0 | 130,0 | M16 x 1,5 | | |
| 0986450851 | 8 | 86,0 | 147,0 | – | 8,0 | 8,0 |
| 0986450735 | 8 | 108,70 | 278,00 | 1-14 UNS | | |
| 0986450732 | 9 | 83,0 | 145,0 | M16 x 1,5 | – | – |
| 0986450731 | 1 | 83,0 | 132,5 | M16 x 1,5 | – | – |
| 0986450730 | 1 | 83,0 | 105,0 | M14 x 1,5 | – | – |
| 0986450728 | 9 | 75,7 | 122,0 | M16 x 1,5 | – | – |
| 0986450725 | 1 | 92,7 | 210,5 | M18 x 1,5 | – | – |
| 0986450723 | 1 | 109,5 | 128,0 | 1" x 14UNS-2B | – | – |
| ● 0986450722 | 7 | 75,7 | 125,5 | M20 x 1,5 | – | – |
| 0986450721 | 7 | 92,7 | 147,0 | 3/4" x 16UNF-2B | – | – |
| 0986450720 | 9 | 86,2 | 128,0 | M20 x 1,5 | – | – |
| 0986450719 | 7 | 92,7 | 147,0 | M20 x 1,5 | – | – |
| 0986450718 | 1 | 96,0 | 176,0 | 1" x 14UNS-2B | – | – |
| 0986450717 | 1 | 110,6 | 182,0 | 3/4" x 16UNF-2B | – | – |
| 0986450715 | 1 | 92,7 | 143,0 | M24 x 1,5 | – | – |
| 0986450714 | 9 | 96,0 | 181,0 | 1" x 14UNS-2B | – | – |
| 0986450713 | 9 | 93,2 | 157,0 | 13/16" x 18UNS-2B | – | – |
| 0986450712 | 9 | 86,2 | 131,0 | M16 x 1,5 | – | – |

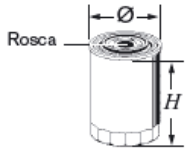


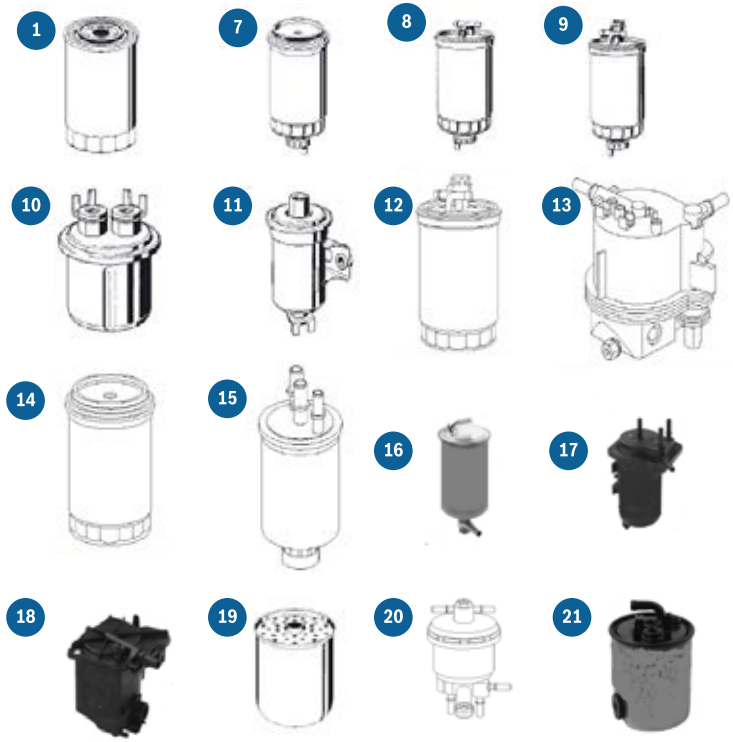


● Producto discontinuado

| Filtro Blindado para Combustible Diesel | | | | | | |
|---|---|---|---|---|---|---|
| **Bosch number** | **Figura** | **ø [mm]** | **H [mm]** | **Rosca** | **Conexión de entrada** | **Conexión de salida** |
| 0986450711 | 1 | 92,7 | 176,0 | 7/8" x 14UNF-2B | – | – |
| 0986450695 | 19 | 88,0 | 70,5 | | | |
| 0986450694 | 19 | 88,0 | 111,0 | | | |
| 0986450519 | 1 | 76,7 | 121,0 | M16 x 1,5 | – | – |
| 0986450509 | 9 | 88,00 | 164,00 | | 8,00 | 8,00 |
| 0450907011 | 17 | 95,00 | 185,00 | | 8,00 | 8,00 |
| 0450907006 | 18 | 110,0 | 120,0 | | 10,0 | |
| ● 0450906471 | 18 | 110,0 | 120,0 | | 10,0 | |
| 0450906469 | 17 | 95,0 | 187,0 | | | |
| ● 0450906468 | 17 | 95,0 | 187,0 | | 8,0 | 8,0 |
| 0450906460 | 13 | 107,0 | 135,0 | | 8,0 | 9,0 |
| ● 0450906431 | 16 | 80,0 | 167,0 | | | |
| 0450906429 | 12 | 80,0 | 134,0 | | 10,0 | 10,0 |
| 0450906426 | 9 | 80,0 | 109,0 | | 8,0 | 8,0 |
| 0450906409 | 9 | 89,0 | 131,0 | | 8,0 | 8,0 |
| 0450906357 | 9 | 89,0 | 175,0 | | 6,6 | 6,6 |
| 0450906322 | 9 | 89,0 | 200,0 | | 8,0 | 8,0 |
| 0450906274 | 9 | 89,0 | 143,0 | | 8,0 | 8,0 |
| 0450905930 | – | 92,0 | 127,0 | – | 10,0 | 10,0 |
| 0986BF0355 | 7 | 93,0 | 130,0 | 3/4" x 16UNF | | |
| 1457434154 | 1 | 83,0 | 123,0 | M16 x 1,5 | | |
| 0450907001 | 20 | 84,0 | 76,0 | | 7,0 | 7,0 |
| F026402862 | 21 | 96,0 | 139,0 | | | |
| F026402840 | 21 | 86,0 | 100,0 | | | |
| F026402828 | 2 | 84,0 | 204,0 | | 10,0 | 10,0 |
| F026402056 | 8 | 90,0 | 100,0 | | 10,0 | 8,0 |
| F026402044 | 21 | 92,0 | 120,0 | | 10,0 | 10,0 |
| F026402036 | 7 | 96,0 | 196,0 | M16 x 1,5 | | |
| F026402019 | | 93,0 | 122,0 | | | |
| F026402010 | 1 | 87,0 | 142,0 | M12 x 1,25// M16 x 1,5 | | |
| F026402017 | 1 | 93,0 | 262,5 | M 32 X 1,5 | | |
| 1457434437 | 9 | 86,0 | 100,0 | | 10,0 | 8,0 |
| ´0450906376 | 9 | 80,0 | 161,0 | | 9,9 | 9,9 |
| 0986BF0350 | 1 | 108,0 | 185,0 | 1-14 UNS // S 90 x 3 | | |

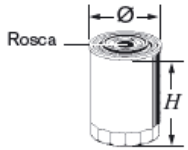


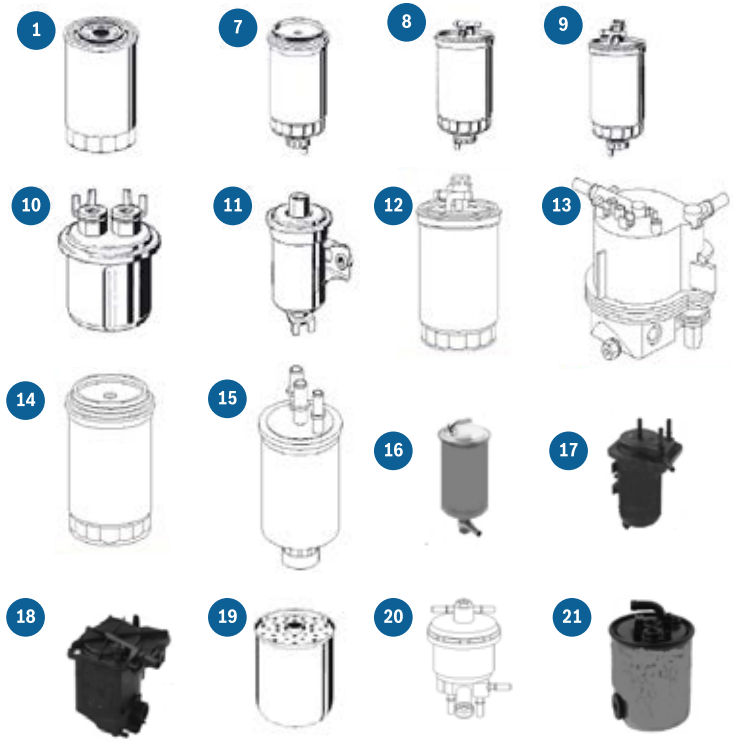


● Producto discontinuado

| Filtro de Combustible separador de agua para motores Diesel | | | | |
|---|---|---|---|---|
| **Bosch number** | **Figura** | **ø [mm]** | **H [mm]** | **Rosca** |
| ● 0986BF0461 | 7 | 96,0 | 148,0 | 1" x 12UNF-2B |
| 0986450734 | 7 | 109,0 | 232,0 | 1" x 14UNS-2B |
| 0986450729 | 7 | 96,0 | 243,5 | 1" x 14UNS-2B |
| 0986450727 | 7 | 109,5 | 224,5 | 1" x 12UNS-2B |
| 0986450726 | 7 | 92,7 | 225,0 | 1" x 14UNS-2B |
| 0986450710 | 7 | 109,5 | 176,5 | 1" x 14UNS-2B |
| 0986450709 | 7 | 109,5 | 195,5 | 1" x 14UNS-2B |
| 0986450708 | 7 | 109,0 | 232,0 | 1" x 14UNS-2B |
| 0986450707 | 7 | 95,5 | 164,5 | 1" x 14UNS-2B |
| ● 0986450706 | 7 | 87,0 | 146,0 | M16 x 1,5 |
| 0986450705 | 7 | 87,0 | 146,0 | M16 x 1,5 |

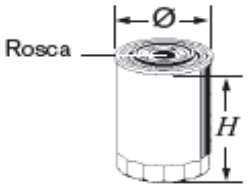


7

| Recipiente purgatorio (Vaso) | | | | |
|---|---|---|---|---|
| **Bosch number** | **Figura** | **ø [mm]** | **H [mm]** | **Rosca** |
| 0986BF0296 | | 114,00 | 89,00 | |
| 0986BF0295 | | 94,00 | 80,00 | |

| Filtro de cabina con carbón activo | | | | |
|---|---|---|---|---|
| **Bosch number** | **Figura** | **ø [mm]** | **a[mm]** | **H [mm]** |
| ● 0986BF0713 | 2 | 20,0 | 232,0 | 177,0 |
| 0986BF0711 | 2 | 30,0 | 282,0 | 206,0 |
| 0986BF0710 | 2 | 22,0 | 293,0 | 227,0 |
| 0986BF0704 | 2 | 34,0 | 364,0 | 250,0 |
| 1987431380 | 2 | 30,0 | 210,0 | 208,0 |
| 1987431371 | 2 | 30,0 | 300,0 | 205,0 |
| 1987431367 | 4 | 28,0 | 282,0 | 203,0 |
| 1987431362 | 2 | 30,0 | 358,0 | 165,0 |
| 1987431361 | 2 | 30,0 | 267,0 | 201,0 |
| ● 1987432311 | 2 | 32,0 | 270,0 | 196,0 |
| 1987432364 | 2 | 40,0 | 226,0 | 207,0 |
| 1987432369 | 2 | 35,0 | 279,0 | 241,0 |
| 1987432412 | 2 | 40,0 | 315,0 | 150,0 |
| 1987432415 | 2 | 22,0 | 236,0 | 190,0 |

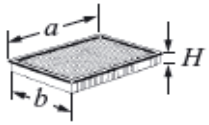


2

4

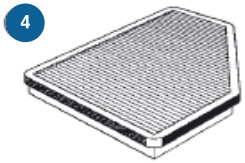

5

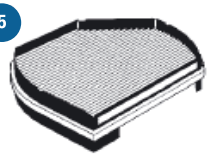

| Filtro de cabina estándar | | | | | |
|---|---|---|---|---|---|
| Bosch number | Figura | ø [mm] | H [mm] | a [mm] | b [mm] |
| 0986BF0717 | 2 | | 30,0 | 200,0 | 173,0 |
| 0986BF0714 | 2 | | 30,0 | 209,0 | 239,0 |
| 0986BF0689 | 2 | | 28,0 | 214,0 | 186,0 |
| 0986BF0658 | | | 35,0 | 350,0 | 235,0 |
| 0986BF0657 | | | 30,0 | 216,0 | 200,0 |
| 0986BF0656 | | | 30,0 | 290,0 | 95,0 |
| 0986BF0642 | | | 32,0 | 254,0 | 181,0 |
| 0986BF0637 | | | 30,0 | 234,0 | 214,0 |
| 0986BF0589 | | | 26,0 | 240,0 | 187,0 |
| 0986BF0587 | | | 35,0 | 240,0 | 204,0 |
| 0986BF0581 | | | 20,0 | 216,0 | 200,0 |
| 0986BF0577 | 2 | | 18,0 | 310,0 | 140,0 |
| 0986BF0576 | 2 | | 30,0 | 224,0 | 216,0 |
| 0986BF0575 | 2 | | 30,0 | 278,0 | 213,0 |
| ● 0986BF0574 | 2 | – | 35,0 | 375,0 | 147,0 |
| 0986BF0573 | 2 | – | 20,0 | 248,0 | 171,5 |
| 0986BF0570 | 2 | – | 33,0 | 576,0 | 163,0 |
| 0986BF0567 | 3 | – | 25,0 | 179,0 | 160,0 |
| 0986BF0566 | 3 | – | 17,0 | 240,0 | 212,0 |
| 0986BF0565 | 2 | – | 21,0 | 235,0 | 224,0 |
| ● 0986BF0564 | 2 | – | 30,0 | 294,0 | 191,0 |
| 0986BF0563 | 2 | – | 17,0 | 215,0 | 114,0 |
| 0986BF0562 | 3 | – | 17,0 | 225,0 | 203,0 |
| 0986BF0561 | 2 | – | 17,0 | 215,0 | 107,5 |
| ● 0986BF0560 | | – | 30,0 | 187,0 | 112,0 |
| 0986BF0559 | 3 | – | 20,0 | 237,0 | 190,0 |
| 0986BF0558 | 3 | | 28,0 | 208,0 | 194,0 |
| 0986BF0557 | 3 | – | 30,0 | 216,0 | 195,0 |
| 0986BF0556 | 3 | – | 22,0 | 208,0 | 193,5 |
| ● 0986BF0555 | 2 | – | 20,0 | 265,0 | 190,0 |
| 0986BF0554 | 3 | – | 29,0 | 209,0 | 205,0 |
| 0986BF0552 | 3 | – | 28,0 | 181,0 | 180,0 |
| 0986BF0551 | 2 | – | 30,0 | 229,5 | 176,5 |
| 0986BF0550 | 2 | – | 30,0 | 230,0 | 160,0 |
| 0986BF0547 | 2 | | 40,0 | 135,0 | 116,0 |
| 0986BF0546 | 2 | – | 30,0 | 285,0 | 176,0 |
| 0986BF0545 | 2 | – | 30,0 | 330,0 | 163,0 |
| ● 0986BF0543 | 2 | – | 23,0 | 245,0 | 182,0 |
| 0986BF0542 | 2 | – | 35,0 | 240,0 | 189,0 |

| Filtro de cabina estándar | | | | | |
|---|---|---|---|---|---|
| Bosch number | Figura | ø [mm] | H [mm] | a [mm] | b [mm] |
| ● 0986BF0541 | 2 | – | 5,0 | 242,0 | 170,0 |
| 0986BF0540 | 2 | – | 26,0 | 294,0 | 147,0 |
| 0986BF0539 | 2 | – | 13,0 | 236,0 | 215,0 |
| ● 0986BF0537 | 2 | – | 32,0 | 519,0 | 105,0 |
| 0986BF0536 | 2 | | 32,0 | 227,0 | 114,0 |
| 0986BF0535 | 2 | – | 22,0 | 245,0 | 226,0 |
| 0986BF0534 | 2 | – | 30,0 | 257,0 | 202,0 |
| 0986BF0533 | 4 | – | 30,0 | 335,0 | 157,0 |
| 0986BF0532 | 2 | – | 18,0 | 385,0 | 172,0 |
| ● 0986BF0531 | 2 | – | 32,0 | 326,0 | 162,0 |
| 0986BF0530 | 6 | – | 31,0 | 412,0 | 167,0 |
| 0986BF0529 | 2 | – | 31,0 | 332,0 | 196,0 |
| 0986BF0528 | 2 | – | 18,0 | 280,0 | 170,0 |
| ● 0986BF0527 | 4 | – | 18,0 | 240,0 | 175,0 |
| ● 0986BF0526 | 2 | – | 18,0 | 385,0 | 171,0 |
| 0986BF0525 | 2 | – | 30,0 | 258,0 | 228,0 |
| 0986BF0524 | 2 | – | 32,0 | 352,0 | 162,0 |
| ● 0986BF0523 | 2 | – | 20,0 | 662,0 | 96,0 |
| ● 0986BF0522 | 2 | – | 22,0 | 212,0 | 198,0 |
| 0986BF0521 | 2 | – | 31,0 | 232,0 | 162,0 |
| ● 0986BF0520 | 2 | – | 32,0 | 265,0 | 182,0 |
| 0986BF0519 | 2 | – | 32,0 | 215,0 | 216,0 |
| ● 0986BF0518 | 2 | – | 12,0 | 237,0 | 282,0 |
| ● 0986BF0517 | 2 | | 32,0 | 265,0 | 123,0 |
| 0986BF0516 | 2 | – | 30,0 | 366,0 | 160,0 |
| 0986BF0515 | 2 | – | 18,0 | 258,0 | 166,0 |
| ● 0986BF0514 | 2 | – | 19,0 | 340,0 | 193,0 |
| 0986BF0513 | 2 | – | 32,0 | 350,0 | 154,0 |
| 0986BF0512 | 2 | – | 32,0 | 251,0 | 214,0 |
| 0986BF0511 | 2 | – | 30,0 | 286,0 | 194,0 |
| 0986BF0510 | 2 | – | 18,0 | 440,0 | 143,0 |
| ● 0986BF0509 | 2 | – | 31,0 | 263,0 | 175,0 |
| 0986BF0508 | 2 | | 32,0 | 376,0 | 80,0 |
| ● 0986BF0507 | 2 | – | 27,0 | 290,0 | 164,0 |
| 0986BF0506 | 2 | – | 26,0 | 279,0 | 205,0 |
| 0986BF0505 | 2 | – | 32,0 | 292,0 | 162,0 |
| ● 0986BF0504 | 2 | – | 23,0 | 327,0 | 165,0 |
| 0986BF0503 | 2 | – | 26,0 | 412,0 | 146,0 |
| 0986BF0502 | 2 | – | 26,0 | 392,0 | 147,0 |

| Filtro de cabina estándar | | | | | |
|---|---|---|---|---|---|
| Bosch number | Figura | ø [mm] | H [mm] | a [mm] | b [mm] |
| 0986BF0501 | 2 | – | 18,0 | 410,0 | 142,0 |
| 0986BF0500 | 5 | – | 55,0 | 264,0 | 216,0 |
| 1987435018 | 2 | | 36,0 | 260,0 | 202,0 |
| ● 1987432415 | 2 | | 22,0 | 236,0 | 190,0 |
| 1987432228 | 2 | | 30,0 | 200,0 | 176,0 |
| 1987432203 | 2 | | 30,0 | 240,0 | 198,0 |
| 1987432153 | 2 | | 68,0 | 223,0 | 165,0 |
| 1987432136 | 3 | | 30,0 | 201,0 | 157,0 |
| 1987432113 | | | 35,0 | 235,0 | 209,0 |
| 1987432097 | 4 | | 33,0 | 272,0 | 211,0 |
| 1987432096 | 2 | | 30,0 | 441,0 | 126,0 |
| 1987432088 | 2 | | 20,0 | 219,0 | 200,0 |
| ● 1987432071 | 2 | – | 30,0 | 300,0 | 205,0 |
| 1987432056 | 1 | 168,0 | 102,0 | – | – |
| 1987431303 | 2 | | 30,0 | 294,0 | 165,0 |
| 1987431167 | 2 | – | 50,0 | 210,0 | 210,0 |
| 1987431079 | 2 | – | 36,0 | 285,0 | 175,0 |
| 1987431073 | 2 | | 35,0 | 509,0 | 99,0 |
| 1987431071 | 2 | – | 30,0 | 300,0 | 205,0 |
| 1987431070 | 4 | – | 25,0 | 332,0 | 189,0 |
| 1987431069 | 2 | – | 30,0 | 228,0 | 195,0 |
| 1987431064 | 2 | | 25,0 | 270,0 | 240,0 |
| 1987431062 | 2 | – | 30,0 | 253,0 | 161,0 |
| 1987431060 | 2 | – | 34,0 | 184,0 | 92,0 |
| 1987431055 | 2 | | 17,0 | 275,0 | 200,0 |
| 1987432053 | 2 | – | 30,0 | 222,0 | 198,0 |
| 1987432028 | 2 | – | 25,0 | 539,0 | 110,0 |
| 1987431047 | 2 | | 25,0 | 270,0 | 167,0 |
| 1987431044 | 2 | | 28,0 | 369,0 | 210,0 |
| 1987431041 | 2 | – | 20,0 | 327,0 | 165,0 |
| 1987431033 | 2 | – | 20,0 | 342,0 | 212,0 |
| ● 1987431028 | 2 | – | 25,0 | 539,0 | 110,0 |
| 1987431024 | 2 | | 31,0 | 310,0 | 193,0 |
| 1987431011 | 3 | – | 42,0 | 196,0 | 170,0 |

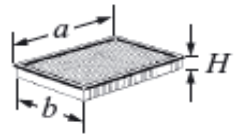


1

2
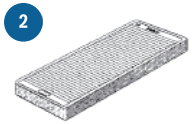

3

4
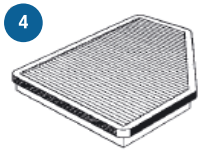

5

6

● Producto discontinuado

| AC DELCO | BOSCH |
|---|---|
| FS 1B | 0450 904 058 |
| GF 735 | 0450 905 916 |
| X 126 | 0451 103 105 |
| X 104 | 0451 103 299 |
| EFL983 | 0451 103 321 |
| 01FBO011 | 0451 103 322 |
| 01FBO026 | 0451 103 323 |
| PF 2 | 0451 103 325 |
| 01FBO042 | 0451 103 332 |
| GF 629 | 0986 450 115 |
| 01FBC011 | 0986 450 144 |
| 01FBC033 | 0986 450 230 |
| FF1050 | 0986 450 234 |
| 01FBC010 | 0986 450 238 |
| 01FBC032 | 0986 450 239 |
| FF20040 | 0986 450 240 |
| HDF494 | 0986 450 519 |
| EFC102 | 0986 450 581 |
| EFC101 | 0986 450 582 |
| HDF096 | 0986 450 695 |
| ACD 53 | 0986 450 696 |
| EFS106 | 0986 450 701 |
| HDF500 | 0986 450 702 |
| PF454 | 0986 450 703 |
| HDF501A | 0986 450 704 |
| EFS104 | 0986 450 708 |
| EFS102 | 0986 450 709 |
| 01FBD020 | 0986 450 710 |
| 01FBD021 | 0986 450 712 |
| HDF500A | 0986 450 713 |
| HDF408 | 0986 450 715 |
| HDF410 | 0986 450 719 |
| HDF411 | 0986 450 721 |
| ● HDF412 | 0986 450 722 |
| HDF822 | 0986 450 725 |
| HDF762 | 0986 450 731 |
| HDF496 | 0986 450 732 |
| EFS103 | 0986 450 734 |
| HDF820 | 0986 450 851 |

| AC DELCO | BOSCH |
|---|---|
| 01FBO045 | 0986 452 350 |
| EFL987 | 0986 452 354 |
| 01FBO036 | 0986 B00 002 |
| 01FBO007 | 0986 B00 006 |
| 01FBO020 | 0986 B00 010 |
| 01FBO025 | 0986 B00 011 |
| 01FBO018 | 0986 B00 013 |
| 01FBO005 | 0986 B00 014 |
| 01FBO043 | 0986 B00 015 |
| EFL561 | 0986 B00 017 |
| PF60 | 0986 B00 018 |
| ● 01FBO022 | 0986 B00 020 |
| EFL619 | 0986 B00 021 |
| 01FBO030 | 0986 B00 023 |
| EFL959 | 0986 B00 026 |
| EFL511 | 0986 B01 003 |
| EFL721 | 0986 B01 008 |
| EFL723 | 0986 B01 010 |
| EFL724 | 0986 B01 011 |
| 01FBO015 | 0986 B01 012 |
| EFL523 | 0986 B01 015 |
| 01FBO041 | 0986 B01 016 |
| EFL343 | 0986 B01 018 |
| EFL993 | 0986 B01 020 |
| ● EFL964 | 0986 B01 023 |
| EFL028 | 0986 B01 025 |
| EFL974 | 0986 B01 026 |
| EFL521 | 0986 B01 027 |
| ● AC 87 | 0986 B01 500 |
| ● AC 83 | 0986 B01 502 |
| EFL425 | 0986 B01 555 |
| EFL225 | 0986 B01 556 |
| EFL526 | 0986 B01 561 |
| EFL718 | 0986 B01 562 |
| EFL925 | 0986 B01 565 |
| EFL043 | 0986 B01 652 |
| 01EFA210 | 0986 B02 002 |
| 01EFA622 | 0986 B02 005 |
| ● 01EFA709 | 0986 B02 006 |

| AC DELCO | BOSCH |
|---|---|
| 01EFA004 | 0986 B02 009 |
| 01EFA833 | 0986 B02 017 |
| 01EFA620 | 0986 B02 018 |
| 01EFA327 | 0986 B02 303 |
| ● 01EFA924 | 0986 B02 304 |
| 01EFA360 | 0986 B02 305 |
| 01EFA988 | 0986 B02 306 |
| 01EFA302 | 0986 B02 307 |
| 01EFA513 | 0986 B02 308 |
| 01EFA921 | 0986 B02 309 |
| A2046C | 0986 B02 310 |
| 01EFA923 | 0986 B02 311 |
| 01EFA519 | 0986 B02 313 |
| 01EFA135 | 0986 B02 314 |
| 01EFA919 | 0986 B02 316 |
| 01EFA421A | 0986 B02 317 |
| 01EFA918 | 0986 B02 318 |
| 01EFA989 | 0986 B02 319 |
| 01EFA990 | 0986 B02 320 |
| 01EFA991 | 0986 B02 321 |
| 01EFA132 | 0986 B02 322 |
| 01EFA600 | 0986 B02 323 |
| 01EFA122 | 0986 B02 324 |
| 01EFA189 | 0986 B02 325 |
| ● 01EFA030 | 0986 B03 501 |
| ● 01EFA012 | 0986 B03 504 |
| ● 01EFA007 | 0986 B03 505 |
| 01EFA414 | 0986 B03 509 |
| 01EFA400 | 0986 B03 511 |
| ● 01EFA902 | 0986 B03 512 |
| 01EFA409 | 0986 B03 513 |
| ● 01EFA413 | 0986 B03 514 |
| 01EFA413/1 | 0986 B03 515 |
| 01EFA891 | 0986 B03 519 |
| ● 01EFA993 | 0986 B03 522 |
| 01EFA148 | 0986 B03 526 |
| 01EFA415 | 0986 B03 531 |
| 01EFA407 | 0986 B03 534 |
| 01EFA405 | 0986 B03 535 |

| AC DELCO | BOSCH |
|---|---|
| 01EFA417 | 0986 B03 536 |
| 01EFA905 | 0986 B03 537 |
| ● A 302 C | 0986 B03 551 |
| 01EFS006 | 0986 B03 902 |
| 01EFA420 | 0986 B03 903 |
| 01EFA421 | 0986 B03 904 |
| 01EFA895 | 0986 B03 905 |
| 01FBC013 | 0986 BF0 018 |
| 01FBD023 | 0986 BF0 400 |
| AC 109 | 1457 429 165 |
| 01EFA907 | 1457 432 286 |
| 01EFA133 | 1457 433 513 |
| XD 77 | 1457 434 103 |
| 01EFA096 | 1987 429 602 |
| 01EFA010 | 1987 429 603 |
| ● 01EFA903 | 1987 429 605 |
| 01EFA078 | 1987 429 606 |
| ● 01EFA897 | 1987 429 608 |

● Producto discontinuado

| DELPHI | BOSCH |
|---|---|
| 6260950 | 1457 434 314 |
| 22703536 | 0986 BF0 501 |
| 22703546 | 0986 BF0 509 |
| 22703548 | 0986 BF0 510 |
| 22703569 | 0986 BF0 516 |
| 22735110 | 0986 BF0 503 |
| 22735125 | 0986 BF0 505 |
| 22735132 | 0986 BF0 506 |
| 22735141 | 0986 BF0 526 |
| 22735145 | 0986 BF0 539 |
| 22735157 | 0986 BF0 533 |
| 22735174 | 0986 BF0 513 |
| 22735264 | 0986 BF0 511 |
| 22735279 | 0986 BF0 540 |
| 22735321 | 0986 BF0 515 |
| 22735322 | 0986 BF0 541 |
| 22735634 | 0986 BF0 711 |
| AF 20023 | 1457 433 742 |
| AF 20028 | 1457 433 769 |
| AF 293 | 1457 433 537 |
| EFA010 | 1987 429 603 |
| EFA210 | 0986 B02 002 |
| EFA302 | 0986 B02 307 |
| EFA327 | 0986 B02 303 |
| EFA360 | 0986 B02 305 |
| EFA400 | 0986 B03 511 |
| EFA405 | 0986 B03 535 |
| EFA407 | 0986 B03 534 |
| EFA409 | 0986 B03 513 |
| EFA411 | 0986 B03 526 |
| EFA413 | 0986 B03 514 |
| EFA4131 | 0986 B03 515 |
| EFA414 | 0986 B03 509 |
| EFA415 | 0986 B03 531 |
| EFA417 | 0986 B03 536 |
| EFA419 | 0986 B03 902 |
| EFA420 | 0986 B03 903 |
| EFA421 | 0986 B03 904 |
| EFA421A | 0986 B02 317 |

| DELPHI | BOSCH |
|---|---|
| EFA513 | 0986 B02 308 |
| EFA519 | 0986 B02 313 |
| EFA605 | 0986 B02 009 |
| EFA620 | 0986 B02 018 |
| EFA622 | 0986 B02 005 |
| EFA709 | 0986 B02 006 |
| EFA833 | 0986 B02 017 |
| EFA891 | 0986 B03 519 |
| EFA892 | 0986 B03 520 |
| EFA895 | 0986 B03 905 |
| ● EFA897 | 1987 429 608 |
| EFA902 | 0986 B03 512 |
| EFA903 | 1987 429 605 |
| EFA905 | 0986 B03 537 |
| EFA907 | 1457 432 286 |
| ● EFA910 | 0986 B03 501 |
| EFA912 | 0986 B03 504 |
| EFA913 | 0986 B03 505 |
| EFA916 | 0986 B03 506 |
| EFA917 | 0986 B02 301 |
| EFA918 | 0986 B02 318 |
| EFA919 | 0986 B02 316 |
| EFA920 | 1457 433 513 |
| EFA921 | 0986 B02 309 |
| EFA922 | 0986 B02 310 |
| EFA924 | 0986 B02 304 |
| EFA926 | 0986 B03 523 |
| EFA929 | 0986 B02 314 |
| EFA930 | 1987 429 606 |
| EFA931 | 0986 B02 322 |
| EFA932 | 1987 429 602 |
| EFA933 | 1457 432 282 |
| EFA934 | 1457 432 284 |
| EFA935 | 1457 432 287 |
| EFA936 | 1457 432 288 |
| EFA937 | 0986 B02 325 |
| EFA940 | 0986 B02 311 |
| EFA941 | 0986 B03 001 |
| EFA942 | 0986 B03 402 |

| DELPHI | BOSCH |
|---|---|
| EFA943 | 0986 B02 312 |
| EFA944 | 1457 432 289 |
| EFA945 | 0986 B03 004 |
| EFA946 | 0986 B03 003 |
| EFA948 | 0986 B03 400 |
| EFA949 | 0986 B03 002 |
| EFA952 | 0986 B03 007 |
| EFA953 | 0986 B03 010 |
| EFA988 | 0986 B02 306 |
| EFA989 | 0986 B02 319 |
| EFA990 | 0986 B02 320 |
| EFA991 | 0986 B02 321 |
| EFA993 | 0986 B03 522 |
| EFC100 | 0986 450 583 |
| EFC101 | 0986 450 582 |
| EFC102 | 0986 450 581 |
| EFL028 | 0986 B01 025 |
| EFL043 | 0986 B01 652 |
| EFL044 | 0986 B00 013 |
| EFL225 | 0986 B01 556 |
| EFL2251 | 0986 B01 012 |
| EFL343 | 0986 B01 018 |
| EFL425 | 0986 B01 555 |
| EFL509 | 0986 B00 014 |
| EFL511 | 0986 B01 003 |
| EFL514 | 0451 103 325 |
| EFL521 | 0986 B01 027 |
| EFL523 | 0986 B01 015 |
| EFL524 | 0986 B01 554 |
| EFL526 | 0986 B01 561 |
| EFL561 | 0986 B00 017 |
| EFL562 | 0986 B00 018 |
| EFL563 | 0986 B00 016 |
| EFL619 | 0986 B00 021 |
| EFL715 | 0451 103 323 |
| EFL718 | 0986 B01 562 |
| EFL721 | 0986 B01 008 |
| EFL723 | 0986 B01 010 |
| EFL724 | 0986 B01 011 |

| DELPHI | BOSCH |
|---|---|
| EFL729 | 0986 B00 010 |
| EFL731 | 0986 B01 001 |
| EFL734 | 0986 B00 015 |
| EFL735 | 0451 103 332 |
| EFL736 | 0986 B00 023 |
| EFL737 | 0986 B01 016 |
| EFL861 | 0986 B01 000 |
| EFL925 | 0986 B01 565 |
| EFL934 | 0986 B00 020 |
| EFL959 | 0986 B00 026 |
| EFL964 | 0986 B01 023 |
| EFL974 | 0986 B01 026 |
| EFL984 | 0986 B00 006 |
| EFL986 | 0986 B00 011 |
| EFL987 | 0986 452 354 |
| EFL989 | 0986 B00 002 |
| EFL992 | 0451 103 322 |
| EFL993 | 0986 B01 020 |
| EFL995 | 0986 B00 019 |
| EFL997 | 0986 B01 557 |
| EFL998 | 0986 B01 569 |
| EFS101 | 0986 450 710 |
| EFS102 | 0986 450 709 |
| EFS103 | 0986 450 734 |
| EFS104 | 0986 450 708 |
| EFS105 | 0986 450 707 |
| EFS106 | 0986 450 701 |
| EFS107 | 0986 450 706 |
| EFS108 | 0986 450 727 |
| EFS109 | 0986 450 726 |
| FA1688 | 0986 B02 323 |
| FF 20001 | 0450 905 939 |
| FF1050 | 0986 450 234 |
| FF20036 | 0986 450 230 |
| FF20038 | 0986 450 144 |
| FF20039 | 0986 450 239 |
| FF20040 | 0986 450 240 |
| FF20041 | 0986 BF0 018 |
| FF20042 | 0986 450 238 |

| DELPHI | BOSCH |
|---|---|
| FF20051 | 0986 450 236 |
| FX 0158 | 1457 429 278 |
| FX 0192 | 1457 429 108 |
| FX 190 | 1457 429 119 |
| FX 20002 | 0451 103 313 |
| FX 20003 | 0451 103 311 |
| FX 20007 | 0451 104 026 |
| HDF296 | 0986 450 695 |
| HDF408 | 0986 450 715 |
| HDF410 | 0986 450 719 |
| HDF411 | 0986 450 721 |
| HDF412 | 0986 450 722 |
| HDF414 | 0986 450 728 |
| HDF416 | 0986 450 723 |
| HDF494 | 0986 450 519 |
| HDF496 | 0986 450 732 |
| HDF500A | 0986 450 713 |
| HDF501 | 0986 450 703 |
| HDF528 | 0986 450 696 |
| HDF529 | 0986 BF0 201 |
| HDF762 | 0986 450 731 |
| HDF820 | 0986 450 851 |
| HDF821 | 0986 450 712 |
| HDF822 | 0986 450 725 |
| HDF907 | 0450 906 468 |
| HDF924 | 0450 906 508 |
| HDF939 | 0450 906 471 |
| HDS130 | 0986 450 705 |
| TSP 0325003 | 0986 BF0 574 |
| TSP 0325005 | 0986 BF0 507 |
| TSP 0325006 | 0986 BF0 504 |
| TSP 0325007 | 0986 BF0 522 |
| TSP 0325020 | 0986 BF0 527 |
| TSP 0325021 | 0986 BF0 528 |
| TSP 0325024 | 0986 BF0 520 |
| TSP 0325033 | 0986 BF0 519 |
| TSP 0325047 | 0986 BF0 517 |
| TSP 0325048 | 0986 BF0 524 |
| TSP 0325051 | 0986 BF0 525 |

| DELPHI | BOSCH |
|---|---|
| TSP 0325107 | 0986 BF0 500 |
| TSP 0325111 | 0986 BF0 512 |
| TSP 0325122 | 0986 BF0 545 |

● Producto discontinuado

| DONALDSON | BOSCH |
|---|---|
| D05E200M | 0986 B01 502 |
| FFP550012 | 0450 904 058 |
| FFP550934 | 0986 450 731 |
| FFP553004 | 0986 450 519 |
| HFP552297 | 0986 B01 000 |
| LF3654 | 0986 B01 020 |
| P 12 4773 | 0986 B03 520 |
| P 14 0110 | 0986 B03 515 |
| P 14 0122 | 0986 B03 514 |
| P 14 0131 | 0986 B03 534 |
| P 14 0133 | 0986 B03 526 |
| P 14 0136 | 0986 B03 513 |
| P 14 0187 | 0986 B03 511 |
| P 15 4145 | 0986 B03 902 |
| P 15 4148 | 0986 B03 904 |
| P 17 2504 | 0986 B01 001 |
| P 17 2513 | 0986 B01 565 |
| P 17 2522 | 0986 B00 026 |
| P 17 2523 | 0451 103 325 |
| P 17 2536 | 0451 103 323 |
| P 17 2539 | 0986 B00 017 |
| P 17 2540 | 0986 B00 018 |
| P 17 2545 | 0986 B01 556 |
| P 17 2547 | 0986 B01 555 |
| ● P 17 2549 | 0986 B01 501 |
| P 17 2550 | 0986 B01 562 |
| P 17 2555 | 0986 B01 015 |
| P 17 2556 | 0986 B00 021 |
| P 17 2559 | 0986 B01 018 |
| P 17 2561 | 0986 B01 023 |
| P 17 2563 | 0986 B01 554 |
| P 17 2650 | 0986 450 704 |
| P 17 2654 | 0986 450 713 |
| P 17 2666 | 0986 450 705 |
| P 17 2677 | 0986 450 706 |
| P 17 2680 | 0986 450 703 |
| P 17 2681 | 0986 450 702 |
| P 17 2728 | 0986 450 732 |
| P 17 2890 | 0986 B01 652 |

| DONALDSON | BOSCH |
|---|---|
| P 17 2930 | 0986 450 582 |
| P 17 2931 | 0986 450 581 |
| P 17 2932 | 0986 450 583 |
| P 18 1052 | 0986 B03 551 |
| P 52 6086 | 0986 B03 519 |
| P 52 7133 | 0986 B03 522 |
| P 53 0126 | 0986 450 707 |
| P 53 2004 | 0986 B03 903 |
| P 53 2010 | 1457 432 286 |
| P 53 2025 | 0986 B02 005 |
| P 53 2031 | 0986 B02 002 |
| P 53 2033 | 0986 B02 009 |
| P 53 2035 | 0986 B02 018 |
| P 53 2037 | 0986 B02 017 |
| P 53 2043 | 0986 B02 307 |
| P 55 0416 | 0986 B00 014 |
| P 55 0639 | F026 407 048 |
| P 55 1605 | 0986 450 717 |
| P 55 1757 | 0986 BF0 232 |
| P 55 2040 | 0986 450 701 |
| P 55 3000 | 0986 B01 011 |
| P 55 3771 | 0986 B01 027 |
| P 55 4055 | 0986 B01 031 |
| P 55 4407 | 0986 B01 028 |
| P 55 6245 | 0986 450 695 |
| P 55 6287 | 0986 450 694 |
| ● P 55 8000 | 0986 BF0 302 |
| P 55 8615 | 0986 B01 008 |
| P 55 8616 | 0986 B01 010 |
| P 77 1573 | 0986 B03 509 |
| P 77 6696 | 0986 B03 905 |
| P 77 8336 | 1457 432 283 |
| P 77 8509 | 1457 433 270 |
| P 77 8994 | 0986 B03 001 |
| P 77 9010 | 0986 B01 500 |
| P 77 9149 | 0986 B01 025 |
| P 77 9212 | 0451 103 271 |
| P 77 9220 | 0986 B01 003 |
| P 77 9250 | 0986 450 696 |

| DONALDSON | BOSCH |
|---|---|
| P 77 9960 | 0986 B01 561 |
| P 771558 | 0986 B03 536 |
| P 771561 | 0986 B03 535 |
| P 78 1466 | F026 404 012 |
| P 782811 | 1987 431 167 |
| P527484 | 1457 432 280 |
| P550520 | 0986 B00 511 |
| P551000 | 0986 BF0 462 |
| P763995 | F026 402 034 |
| P780621 | F026 400 086 |
| P780622 | F026 400 083 |

● Producto discontinuado

| FIAAM | BOSCH |
|---|---|
| ANF 1276 | 1457 429 119 |
| ANF 1524 | 1457 433 769 |
| FA 4018 A | 0986 B01 652 |
| FA 4161/2 | 0986 450 696 |
| FA 4584 | 1457 429 165 |
| FA 4816 A | 1457 429 610 |
| FA 4889 A | 0986 B01 562 |
| FA 4901 A | 0986 B01 561 |
| FA 5015 | 1457 429 606 |
| FA 5155 | 1457 429 760 |
| FA 5156 | 1457 429 638 |
| FA 5228 | 1457 429 122 |
| FA 5282 | 1457 429 275 |
| FA 5285 | 1457 429 278 |
| FA 5362 | 1457 429 656 |
| FA 5387 | 1457 429 616 |
| FA 5408 | 1457 429 139 |
| FA 5412 | 0986 B00 707 |
| FA 5412 | 1457 429 619 |
| FA 5420 | 1457 437 001 |
| FA 5420 | 1457 437 002 |
| FA 5437 | 1457 429 108 |
| FA 5438 | 1457 437 003 |
| FA 5439 | 1457 429 141 |
| FA 5440 | 1457 429 142 |
| FA 5454 ECO | 1457 429 147 |
| FA 5557 ECO | 1457 431 704 |
| FA 5558 ECO | 1457 429 152 |
| FA 5559 | 1457 429 128 |
| FA 5565 ECO | 1457 431 708 |
| FA 5577 | 1457 429 121 |
| FA 5588 ECO | 1457 429 199 |
| FA 5607 | 0986 B00 701 |
| FA 5616 ECO | 1457 429 193 |
| FA 5620 ECO | 0986 B00 708 |
| FA 5620 ECO | 1457 429 192 |
| FA 5627 ECO | 1457 429 244 |
| FA 5636 | 1457 429 185 |
| FA 5709 ECO | 0986 B00 705 |

| FIAAM | BOSCH |
|---|---|
| FA 5709 ECO | 1457 429 249 |
| FA5670 | 0986 B00 711 |
| FA5670 | 1457 429 238 |
| FB 1277 | 0986 B01 502 |
| FB 1278 | 0986 B01 500 |
| FB 1517 A | 0986 B01 551 |
| FB 1526 | 1457 429 274 |
| FC 1027 B | 0986 450 702 |
| FC 1495 B | 0986 450 703 |
| FD 1283 | 0986 450 695 |
| ● FL 6300 | 0986 B02 002 |
| FL 6390 | 0986 B02 018 |
| FL 6402 | 1457 432 111 |
| FL 6629 | 1457 429 953 |
| FL 6670 | 1457 429 992 |
| ● FL 6775 | 1457 429 970 |
| FL 6795 | 1457 429 775 |
| FL 6803 | 1457 433 227 |
| FL 6827 | 1457 429 787 |
| FL 6906 | 1457 429 839 |
| FL 6922 | 1457 433 154 |
| FL 6936 | 1457 433 715 |
| FL 6994 | 1457 433 588 |
| FL 9015 | 0986 B02 052 |
| FL 9015 | 1457 433 311 |
| FLI 6818 | 1457 433 735 |
| FLI 6856/1 | 1457 433 270 |
| FP 4671 | 0986 450 732 |
| FP 4683 | 0986 450 731 |
| FP 4779 | 0986 450 694 |
| FP 4980 | 1457 434 103 |
| FP 5038 | 0986 450 851 |
| FP 5091 | 0986 450 721 |
| FP 5092 | 0986 450 719 |
| FP 5359 | 0986 BF0 471 |
| FP 5425 | 1457 434 293 |
| FP 5432 | 1457 434 440 |
| FP 5570 | 0450 906 274 |
| FP 5571 | 1457 434 194 |

| FIAAM | BOSCH |
|---|---|
| FP 5614 | 0450 906 508 |
| FP 5749 | 0450 906 460 |
| FT 4403 | 0451 103 325 |
| FT 4657 | 0986 B01 015 |
| FT 4670 T | 0986 B01 031 |
| FT 4776 | 0986 B01 003 |
| FT 4809 | 0451 103 322 |
| FT 4837 | 0451 103 271 |
| FT 4840 | 0986 450 730 |
| FT 4862 | 0986 B00 018 |
| FT 4874 | 0450 904 058 |
| FT 4878 | 0986 B01 018 |
| FT 4949 | 0451 103 351 |
| FT 4960 | 0451 103 321 |
| FT 4970 | 0986 B00 021 |
| FT 4985 | 0986 B00 028 |
| FT 4993 | 0451 103 299 |
| FT 5055 A | 1457 434 123 |
| FT 5065 | 0986 B00 013 |
| FT 5073 | 0451 103 105 |
| FT 5087 | 0451 103 323 |
| FT 5119 | 0986 B01 001 |
| FT 5121 | F026 407 049 |
| FT 5140 | 0450 905 203 |
| FT 5141 | 0450 905 095 |
| FT 5141 | 0450 905 201 |
| FT 5141 | 0450 905 264 |
| FT 5141 | 0450 905 275 |
| FT 5141 | 0450 915 003 |
| FT 5141 | 0986 450 234 |
| FT 5141 | 0986 450 239 |
| FT 5144 | 0451 103 258 |
| FT 5151 | 0986 B00 011 |
| FT 5163 | 0986 B00 007 |
| FT 5198 | 0450 905 021 |
| FT 5199 | 0450 905 177 |
| FT 5203 | 0450 905 087 |
| FT 5203 | 0450 905 906 |
| FT 5205 | 0450 905 005 |

| FIAAM | BOSCH |
|---|---|
| FT 5206 | 0450 902 151 |
| FT 5207 | 0986 450 240 |
| FT 5208 | 0450 905 901 |
| FT 5216 | 0986 B00 015 |
| FT 5227 | 0451 104 026 |
| FT 5230 | 0451 103 240 |
| FT 5238 | 0986 B00 003 |
| FT 5254 | 0986 B00 019 |
| FT 5256 | F026 407 005 |
| FT 5259 | 0986 B00 004 |
| FT 5261 | 0450 905 324 |
| FT 5266 | 0986 B00 002 |
| FT 5272 | 0986 452 028 |
| FT 5272 | 0986 452 350 |
| FT 5275 | 1457 434 402 |
| FT 5284 | 0451 103 260 |
| FT 5289 | 1457 434 184 |
| FT 5290 | 1457 434 187 |
| FT 5296 | 0450 905 216 |
| FT 5309 | 1457 434 291 |
| FT 5310 | 0451 103 354 |
| FT 5332 | 0451 103 300 |
| FT 5347 | 0451 103 290 |
| FT 5351 | 0986 450 230 |
| FT 5363 | 0451 103 313 |
| FT 5371 | 0450 905 916 |
| FT 5374 | 0450 905 908 |
| FT 5378 | 0451 103 311 |
| FT 5380 | 0986 450 236 |
| FT 5385 | 0986 BF0 400 |
| FT 5386 | 0450 902 161 |
| FT 5406 | 0986 452 061 |
| FT 5406 | 0986 B00 023 |
| FT 5409 | 0451 103 332 |
| FT 5415 | 0450 905 905 |
| FT 5429 | 0986 452 062 |
| FT 5433 | 0986 B01 004 |
| FT 5434 | 0451 103 365 |
| FT 5449 | 0986 452 064 |

| FIAAM | BOSCH |
|---|---|
| FT 5455 | 0451 103 341 |
| FT 5460 | 0986 B01 020 |
| FT 5467 | 0450 905 939 |
| FT 5471 | 0986 450 115 |
| FT 5525 | 0450 906 357 |
| FT 5604 | 0986 450 722 |
| FT 5624 | 0451 103 363 |
| PA 7002 | 1457 429 076 |
| PA 7070 | 1457 429 783 |
| PA 7071 | 1457 429 988 |
| PA 7080 | 1457 432 202 |
| PA 7090 | 0986 B02 316 |
| PA 7094 | 1457 429 875 |
| PA 7095 | 0986 B02 303 |
| PA 7109 | 1457 429 777 |
| PA 7111 | 0986 B02 340 |
| PA 7119 | 1457 433 004 |
| PA 7122 | 1457 433 002 |
| PA 7126 | 0986 B02 313 |
| PA 7134 | 0986 B02 311 |
| PA 7136 | 0986 B02 305 |
| PA 7136 A | 1457 433 253 |
| PA 7137 | 0986 B02 309 |
| PA 7138 | 1457 433 007 |
| PA 7142 | 0986 B02 319 |
| PA 7147 | 1457 433 623 |
| PA 7157 A | 0986 B02 304 |
| PA 7159 | 1457 433 608 |
| PA 7163 | 1457 433 263 |
| PA 7164 | 1457 433 752 |
| PA 7165 | 1457 433 260 |
| PA 7177 | 1457 433 697 |
| PA 7180 | 1457 433 743 |
| PA 7189 | 1457 433 616 |
| PA 7192 | 0986 B02 318 |
| PA 7196 | 1457 433 699 |
| PA 7198 | 1457 433 747 |
| PA 7199 | 1457 433 272 |
| PA 7206 | 1457 433 711 |

| FIAAM | BOSCH |
|---|---|
| PA 7208 | 1457 433 742 |
| PA 7209 | 1457 433 958 |
| PA 7216 | 0986 B02 310 |
| PA 7217 | 1457 433 753 |
| PA 7224 | 1457 433 716 |
| PA 7228 | 1457 433 956 |
| PA 7248 | 1457 433 513 |
| PA 7249 | 1457 433 700 |
| PA 7256 | 0986 B02 312 |
| PA 7264 | 1457 433 537 |
| PA 7271 | 1457 433 955 |
| PA 7297 | 1457 433 751 |
| PA 7329 | 0986 B02 053 |
| PA 7329 | 1457 433 058 |
| PA 7333 | 0986 B02 506 |
| PA 7360 | 1457 433 158 |
| PA 7365 | 1457 433 150 |
| PA 7366 | 1457 433 090 |
| PA 7371 | 0986 B02 331 |
| PA 7371 | 1457 433 078 |
| PA 7406 | 1457 433 076 |
| PA 7450 | 1987 429 406 |
| PA 7524 | 0986 B02 051 |
| PA 7544 | 0986 B02 354 |
| PA7579 | 0986 B02 377 |
| PC 8001 | 0986 BF0 506 |
| PC 8002 | 0986 BF0 501 |
| PC 8003 | 0986 BF0 522 |
| PC 8007 | 0986 BF0 514 |
| PC 8011 | 0986 BF0 505 |
| PC 8012 | 0986 BF0 513 |
| PC 8013 | 0986 BF0 526 |
| PC 8018 | 0986 BF0 509 |
| PC 8028 | 0986 BF0 503 |

● Producto discontinuado

| FIAAM | BOSCH |
|---|---|
| PC 8035 | 0986 BF0 704 |
| PC 8043 | 0986 BF0 524 |
| PC 8046 | 0986 BF0 525 |
| PC 8047 | 0986 BF0 511 |
| PC 8051 | 0986 BF0 510 |
| PC 8058 | 0986 BF0 516 |
| PC 8076 | 0986 BF0 576 |
| PC 8088 | 0986 BF0 546 |
| PCK 8045 | 0986 BF0 711 |
| | |
| | |
| | |
| | |
| | |

● Producto discontinuado

| FLEETGUARD | BOSCH |
|---|---|
| AF1793 | 0986 B03 514 |
| AF1802 | 0986 B03 536 |
| AF1840 | 0986 B03 904 |
| AF1841 | 0986 B03 905 |
| AF1842 | 0986 B03 903 |
| AF1865 | 0986 B03 526 |
| AF1879 | 0986 B03 540 |
| AF25007 | 0986 B03 522 |
| AF25064 | 0986 B03 535 |
| AF25065 | 0986 B03 513 |
| AF25075 | 0986 B03 531 |
| AF25076 | 0986 B03 512 |
| AF25201 | 0986 B02 305 |
| AF25202 | 0986 B02 018 |
| AF25203 | 0986 B02 017 |
| AF25206 | 0986 B02 307 |
| AF25209 | 0986 B02 005 |
| AF25260 | 0986 B03 009 |
| AF25260 | 1457 433 270 |
| AF25333 | F026 400 083 |
| AF25382 | F026 400 086 |
| AF25565 | 0986 B03 002 |
| AF25566 | 0986 B03 400 |
| AF25721 | 0986 B03 004 |
| AF25722 | 0986 B03 402 |
| AF25724 | 0986 B03 408 |
| AF25727 | 1457 432 286 |
| AF25729 | 0986 B03 006 |
| AF25997 | 0986 B03 003 |
| AF26211 | 0986 B03 406 |
| AF26395 | 0986 B03 001 |
| AF4058 | 0986 B03 511 |
| AF4060 | 0986 B03 515 |
| AF4067 | 0986 B03 534 |
| AF4522 | 0986 B03 902 |
| AF4534 | 0986 B03 519 |
| AF4631 | 0986 B03 509 |
| AF4772 | 0986 B03 520 |
| AF4878 | 1457 432 280 |

| FLEETGUARD | BOSCH |
|---|---|
| AF807K | 0986 B03 551 |
| FF138 | 0986 450 695 |
| FF147 | 0986 450 696 |
| FF149 | 0450 904 058 |
| FF185 | 1457 434 180 |
| FF200 | 0986 450 713 |
| FF214 | 0986 450 732 |
| FF4013 | 0986 450 731 |
| FF4033 | 0986 450 703 |
| FF4052 | 0986 450 694 |
| FF4141 | 0986 450 704 |
| FF5052 | 0986 450 519 |
| FF5053 | 0986 450 702 |
| FF5112 | 0986 450 730 |
| FF5153 | 1457 434 123 |
| FF5186 | 0986 450 234 |
| FF5232 | 0450 905 021 |
| FF5272 | 0986 450 725 |
| FF5297 | 0986 450 715 |
| FF5312 | 0986 BF0 400 |
| FF5320 | 0986 450 718 |
| FF5380 | 0986 BF0 201 |
| FF5421 | 0986 BF0 368 |
| FS1000 | 0986 BF0 462 |
| FS1015 | 0986 450 726 |
| FS1207 | 0986 450 701 |
| FS1234 | 0986 450 707 |
| FS1242 | 0986 BF0 224 |
| FS1251 | 0986 450 728 |
| FS19520 | 0986 BF0 461 |
| HF6080 | 0986 B01 000 |
| HF6161 | 1457 429 165 |
| HF6162 | 0986 B01 652 |
| HF7535 | 0986 B01 004 |
| LE3355 | 0986 B01 556 |
| LF16015 | 0986 B00 511 |
| LF3000 | 0986 B01 011 |
| LF3313 | 0451 103 325 |
| LF3320 | 0986 B01 562 |

| FLEETGUARD | BOSCH |
|---|---|
| LF3321 | 0986 B01 018 |
| LF3322 | 0986 B01 565 |
| LF3327 | 0986 B01 561 |
| LF3335 | 0451 103 271 |
| LF3336 | 0986 B00 024 |
| LF3338 | 0986 452 028 |
| LF3338 | 0986 452 350 |
| LF3345 | 0986 B01 010 |
| LF3346 | 0986 B01 015 |
| LF3347 | 0986 B01 031 |
| LF3349 | 0986 B01 008 |
| LF3350 | 0986 B01 554 |
| LF3358 | 0986 B01 500 |
| LF3391 | 0986 B01 502 |
| LF3397 | 0986 B01 551 |
| LF3400 | 0986 B00 014 |
| LF3402 | 0986 B01 025 |
| LF3406 | 0986 B01 555 |
| LF34431 | 0986 B01 023 |
| LF3462 | 0986 452 354 |
| LF3481 | 0986 B01 001 |
| LF3568 | 0986 B00 018 |
| LF3574 | 0451 103 323 |
| LF3584 | 1457 429 274 |
| LF3608 | 0986 452 062 |
| LF3624 | 0451 103 299 |
| LF3624 | 0986 B00 002 |
| LF3644 | 0986 B00 015 |
| LF3654 | 0986 B01 020 |
| LF3668 | 0986 B00 021 |
| LF3692 | 0986 B00 023 |
| LF3769 | 1457 429 278 |
| LF3826 | 0451 103 321 |
| LF3827 | 0986 B01 557 |
| LF3914 | 0986 B01 569 |
| LF4054 | 0986 B01 027 |
| ● LF501 | 0986 B01 501 |
| LF580 | 0451 103 351 |
| LF653 | 0986 B00 026 |

| FLEETGUARD | BOSCH |
|---|---|
| LF699 | 0986 B01 028 |
| LF785 | 0986 B00 017 |
| LF9009 | 0986 B01 043 |
| WF2010 | 0986 450 583 |
| WF2013 | 0986 450 581 |
| WF2070 | 0986 450 582 |

● Producto discontinuado

| FRAM | BOSCH |
|---|---|
| C10353 | 0986 AF6 100 |
| C11860PL | 0986 BF0 200 |
| C11860Z | 0986 450 704 |
| C11861PL | 0986 450 696 |
| C11861Z | 0986 450 703 |
| C11864Z | 0986 450 702 |
| C11909PL | 0986 BF0 211 |
| C1191 | 0986 450 695 |
| ● C175E | 0986 B01 501 |
| ● C31PL | 0986 B01 502 |
| ● C4202R | 0986 B03 544 |
| C4661 | 0986 450 694 |
| C4DB | 0986 B01 500 |
| C5563 | 0986 BF0 204 |
| C5897 | 1457 429 656 |
| C5932 | 1457 429 655 |
| C5940 | 0986 BF0 205 |
| C8820 | 0986 BF0 210 |
| C8826 | 0986 BF0 201 |
| C8827 | 0986 BF0 207 |
| C8837 | 0986 BF0 208 |
| C8981ECO | 1457 431 704 |
| C8990ECO | 1457 431 708 |
| ● C9712 | 0986 BF0 423 |
| C9712 | 1457 070 000 |
| C9766ECO | 1457 070 007 |
| C9815 | 1457 431 723 |
| CA10023 | 0986 B02 369 |
| CA10085 | 0986 B02 377 |
| CA10111 | 0986 B03 566 |
| CA10112 | 0986 AF2 180 |
| CA10165 | F026 400 098 |
| CA10227 | 0986 B02 373 |
| CA10237 | 0986 B02 354 |
| CA10276 | 0986 B02 374 |
| CA10278 | 0986 B02 376 |
| CA10328 | 0986 B02 378 |
| CA10456 | 0986 B02 356 |
| CA10521 | 0986 B02 041 |

| FRAM | BOSCH |
|---|---|
| CA10696 | 0986 B02 504 |
| CA10879 | 0986 B02 507 |
| CA10997 | 0986 B02 512 |
| CA11077 | 0986 B03 014 |
| CA11104 | 0986 B02 510 |
| CA11112 | 0986 B02 516 |
| CA11674 | 0986 B03 013 |
| CA1566 | 0986 B02 020 |
| CA2671 | 1457 432 111 |
| CA2678 | 0986 B02 032 |
| CA2718 | 0986 B02 002 |
| CA2732 | 0986 B02 009 |
| CA283A | 0986 B03 531 |
| CA3105 | 0986 B03 534 |
| CA3115 | 0986 B03 506 |
| CA3154 | 1987 429 603 |
| CA3164 | 0986 B02 031 |
| CA3167 | 0986 B02 005 |
| CA3280 | 0986 B03 515 |
| ● CA3290 | 0986 B03 514 |
| ● CA3290 | 0986 B03 555 |
| CA3291 | 0986 B03 535 |
| CA3291SY | 0986 B03 904 |
| CA3295 | 0986 B03 526 |
| CA3295SY | 0986 B03 902 |
| CA3333 | 0986 B02 018 |
| CA3373 | 1457 429 076 |
| CA3914 | 1987 429 606 |
| CA4202 | 0986 B03 511 |
| CA4202SY | 0986 B03 903 |
| CA4215 | 0986 B03 536 |
| CA4221 | 0986 B03 509 |
| ● CA4255 | 0986 B03 504 |
| ● CA4284 | 0986 B02 033 |
| CA4309 | 1987 429 051 |
| CA4335 | 1457 429 992 |
| CA4336 | 0986 B02 017 |
| CA4352 | 0986 B02 034 |
| CA4354 | 0986 B02 028 |

| FRAM | BOSCH |
|---|---|
| CA4499 | 1457 429 953 |
| CA4579 | 1457 429 988 |
| CA4580 | 1457 429 783 |
| CA4599 | 1457 432 202 |
| CA4685 | 0986 B03 513 |
| CA4685SY | 0986 B03 905 |
| ● CA4691 | 0986 B03 520 |
| ● CA4692SY | 1987 429 608 |
| CA4813 | 0986 B03 554 |
| CA4877 | 1457 429 954 |
| ● CA4893 | 0986 B03 540 |
| CA4946 | 1457 429 970 |
| CA4989 | 0986 B03 512 |
| CA5108 | 0986 B02 316 |
| CA5111 | 0986 B02 343 |
| CA5140 | 0986 B02 303 |
| CA5144 | 1457 429 875 |
| CA5155 | 0986 B03 521 |
| CA5156 | 0986 B02 307 |
| CA5160 | 0986 B02 502 |
| CA5161 | 1457 429 775 |
| CA5164 | 0986 B02 345 |
| CA5233 | 0986 B02 340 |
| CA5266 | 0986 B02 338 |
| ● CA5301 | 1457 429 777 |
| CA5304 | 0986 B03 553 |
| CA5308 | 0986 B02 024 |
| CA5309 | 0986 B02 030 |
| CA5325 | 0986 B02 305 |
| CA5329 | 1457 433 227 |
| ● CA5331 | 0986 B02 019 |
| CA5347 | 0986 B03 522 |
| CA5350 | 1457 433 004 |
| ● CA5356 | 0986 B02 006 |
| CA5357 | 0986 B02 319 |
| CA5369 | 1457 433 275 |
| CA5370 | 0986 B02 309 |
| ● CA5371 | 1457 433 512 |
| CA5376 | 1457 433 253 |

| FRAM | BOSCH |
|---|---|
| CA5377 | 0986 B02 311 |
| CA5400 | 1457 433 007 |
| ● CA5416 | 0986 B02 023 |
| CA5435 | 1457 433 601 |
| CA5456 | 0986 B02 025 |
| CA5456 | 0986 B02 026 |
| CA546 | 0986 B03 519 |
| CA5461 | 0986 B02 021 |
| CA5463 | 1457 433 623 |
| CA5466 | 1457 433 958 |
| CA5488 | 0986 B02 339 |
| CA5492 | 1457 433 608 |
| CA5496 | 0986 B02 313 |
| CA5499 | 0986 B02 301 |
| CA5501 | 0986 B02 334 |
| CA5513 | 0986 B02 308 |
| CA5538 | 1457 433 263 |
| CA5539 | 1457 433 752 |
| CA5554 | 1457 433 260 |
| CA5578 | 1457 433 711 |
| CA5611 | 1457 432 282 |
| ● CA5613 | 1457 433 266 |
| CA5626 | 0986 B03 537 |
| CA5626PU | 0986 B03 003 |
| CA5626SYPU | 0986 B03 406 |
| CA5627 | 0986 B02 306 |
| ● CA5630A | 0986 B02 304 |
| CA5657 | 0986 B02 336 |
| CA5673 | 1457 433 743 |
| CA5677 | 0986 B02 337 |
| CA5680 | 0986 B02 318 |
| CA5682 | 0986 B02 320 |
| ● CA5699 | F026 400 077 |
| CA5699 | F026 400 288 |
| CA5709 | 1457 433 742 |
| CA5716 | 1457 433 616 |
| CA5760 | 1457 433 904 |
| CA5776 | 1457 433 769 |
| CA5780 | 1457 433 272 |

| FRAM | BOSCH |
|---|---|
| CA5781 | 1457 433 747 |
| CA5782 | 1457 433 699 |
| ● CA5787 | 0986 B03 009 |
| CA5787 | 1457 433 270 |
| ● CA5812 | 0986 B03 501 |
| CA5826 | 1457 433 753 |
| CA5827 | 0986 B02 310 |
| CA5837 | 0986 B02 321 |
| CA5854 | 1457 433 771 |
| CA5860 | 1457 433 792 |
| CA5898 | 1457 433 716 |
| CA5901 | 0986 B03 505 |
| CA5929 | 0986 B02 323 |
| CA5930 | 1457 433 154 |
| CA5941 | 0986 B02 335 |
| CA5961 | 1457 432 286 |
| CA5970 | 1457 433 513 |
| ● CA5971 | 1987 429 605 |
| CA5981 | 0986 B02 314 |
| CA5999 | F026 400 086 |
| CA6393 | 1457 429 839 |
| CA6395 | 1987 429 135 |
| CA6868 | 1457 433 002 |
| ● CA7139 | 1457 432 280 |
| ● CA7139SY | 1457 432 290 |
| CA7248 | 1457 429 787 |
| CA7336 | 1457 433 700 |
| CA7421 | 0986 B02 317 |
| CA7764 | 1457 433 955 |
| CA8069 | 1457 433 956 |
| CA8243 | 1987 429 602 |
| CA8666 | F026 400 083 |
| CA8668 | 1457 432 281 |
| CA8674 | 0986 B02 312 |
| CA8675 | 0986 B02 500 |
| CA8675 | F026 400 010 |
| CA8736 | 0986 B02 322 |
| CA8786 | 1457 433 161 |
| CA8789 | 1457 433 715 |

● Producto discontinuado

| FRAM | BOSCH |
|---|---|
| CA8817 | 1987 429 189 |
| CA8821 | 0986 B02 341 |
| CA8847 | 0986 B02 506 |
| CA8887 | 1457 433 772 |
| CA8919 | 0986 B02 042 |
| CA8934 | 1457 433 588 |
| CA8963 | 1457 433 527 |
| ● CA8964 | 0986 B02 333 |
| CA8964 | 0986 B02 360 |
| CA8995 | 0986 B02 053 |
| CA8995 | 1457 433 058 ● |
| CA8996 | 0986 B03 574 |
| CA9002SY | 0986 B03 402 |
| CA9003 | 0986 B03 002 |
| CA9032 | 1457 432 288 |
| CA9033 | 1457 432 289 |
| CA9074 | 0986 B02 052 |
| ● CA9074 | 1457 433 311 |
| CA9078 | 0986 B02 051 |
| CA9081 | 1457 433 150 |
| CA9082 | 1457 433 090 |
| CA9098 | 0986 B02 342 |
| CA9283 | 1457 432 287 |
| CA9313 | 1457 433 158 |
| CA9315 | 0986 B02 518 |
| CA9328 | 1457 433 152 |
| CA9352 | 0986 B03 001 |
| CA9355 | 1457 432 284 |
| CA9369 | 0986 B03 008 |
| CA9375 | 1457 433 555 |
| CA9388 | 1457 433 560 |
| CA9391 | 0986 B02 328 |
| CA9393 | 0986 B03 571 |
| CA9409 | 1457 433 046 |
| CA9410 | 0986 B02 371 |
| CA9411 | 0986 B02 331 |
| ● CA9411 | 1457 433 078 |
| CA9419 | 1457 432 283 |
| CA9431 | 0986 B02 332 |

| FRAM | BOSCH |
|---|---|
| CA9482 | F026 400 017 |
| CA9511 | 0986 B02 325 |
| CA9519 | 0986 B02 324 |
| ● CA9560 | 0986 B03 523 |
| CA9571 | F026 400 074 |
| CA9572 | 1457 433 076 |
| CA9572D | 0986 B02 503 |
| CA9711 | 1987 429 404 |
| CA9746 | 0986 B03 006 |
| CA9746SY | 0986 B03 403 |
| CA9747 | 0986 B03 010 |
| CA9754 | 1987 429 406 |
| CA9764 | 0986 B02 505 |
| CA9783 | F026 400 078 |
| CA9833 | 0986 B03 007 |
| CA9902 | 0986 B02 517 |
| CA9937 | 0986 B03 575 |
| CA9945 | 1987 429 191 |
| CAK253 | 0986 B03 551 |
| CF 5818 | 0986 BF0 577 |
| CF10073 | 0986 BF0 552 |
| CF10210 | 0986 BF0 559 |
| CF10285 | 0986 BF0 558 |
| CF10569 | 0986 BF0 587 |
| CF10843 | 0986 BF0 554 |
| CF11548 | 0986 BF0 656 |
| CF5475 | 0986 BF0 501 |
| CF5551 | 0986 BF0 522 |
| CF5662 | 0986 BF0 574 |
| CF5663 | 0986 BF0 506 |
| CF5664 | 0986 BF0 537 |
| CF5817 | 0986 BF0 513 |
| CF5819 | 0986 BF0 505 |
| CF5823 | 0986 BF0 526 |
| ● CF5841 | 0986 BF0 518 |
| CF5842 | 0986 BF0 500 |
| CF5846 | 0986 BF0 531 |
| CF5848 | 0986 BF0 527 |
| CF5849 | 0986 BF0 528 |

| FRAM | BOSCH |
|---|---|
| CF5863 | 0986 BF0 503 |
| CF5864 | 0986 BF0 509 |
| CF5865 | 0986 BF0 519 |
| CF5892 | 1987 431 167 |
| CF5893 | 0986 BF0 543 |
| CF5935 | 0986 BF0 504 |
| CF5972 | 0986 BF0 517 |
| CF8331 | 0986 BF0 524 |
| ● CF8777 | 0986 BF0 704 |
| CF8838 | 0986 BF0 550 |
| CF8867 | 0986 BF0 525 |
| CF8868 | 0986 BF0 511 |
| CF8869 | 0986 BF0 711 |
| CF8890 | 0986 BF0 510 |
| CF8913 | 0986 BF0 523 |
| CF8989 | 0986 BF0 539 |
| CF9034 | 0986 BF0 541 |
| CF9051 | 0986 BF0 516 |
| CF9071 | 0986 BF0 533 |
| CF9084 | 0986 BF0 540 |
| CF9086 | 0986 BF0 565 |
| CF9293 | 1987 432 069 |
| CF9294 | 0986 BF0 576 |
| CF9323 | 0986 BF0 512 |
| CF9398 | 0986 BF0 546 |
| CF9466 | 0986 BF0 556 |
| CF9478 | 0986 BF0 515 |
| CF9479 | 0986 BF0 534 |
| CF9495 | 0986 BF0 545 |
| CF9579 | 1987 432 056 |
| CF9655 | 1987 432 153 |
| CF9686 | 1987 432 088 |
| CF9881 | 0986 BF0 575 |
| CF9922 | 1987 432 097 |
| CFA9533 | 0986 BF0 713 |
| CG8673 | 0986 BF0 206 |
| ● CG8953 | 0986 BF0 209 |
| CH 10090 | 0986 B01 576 |
| CH 5979 ECO | 1457 429 139 |

| FRAM | BOSCH |
|---|---|
| CH 8158 ECO | 1457 429 142 |
| CH 8213 | 1457 429 141 |
| CH 8530 ECO | 0986 B00 707 |
| ● CH 8530 ECO | 1457 429 619 |
| CH 9011 ECO | 1457 429 119 |
| CH 9305 ECO | 1457 429 199 |
| CH 9461 | 0986 B00 708 |
| ● CH 9461 | 1457 429 192 |
| CH 9496 | 1457 429 244 |
| CH 9657 | 0986 B00 711 |
| ● CH 9657 | 1457 429 238 |
| CH10075 | 1457 429 269 |
| CH10197 | F026 407 002 |
| CH10246 | F026 407 006 |
| CH10759ECO | 0986 B00 706 |
| ● CH10759ECO | F026 407 023 |
| CH2801 | 0986 B01 555 |
| CH2869 | 0986 B01 554 |
| CH2927A | 0986 B01 565 |
| ● CH2930 | 0986 B01 551 |
| CH2962 | 0986 B01 561 |
| CH2963 | 0986 B01 562 |
| CH4536 | 1457 429 274 |
| CH457PL | 1457 429 165 |
| CH4747 | 1457 429 606 |
| ● CH4748 | 1457 429 610 |
| CH5151 | 1457 429 760 |
| CH5262 | 0986 B01 556 |
| CH5320 | 1457 429 638 |
| CH5640 | 1457 429 278 |
| CH5644 | 1457 429 275 |
| CH5933 | 1457 429 128 |
| CH5993 | 1457 437 001 |
| CH5993 | 1457 437 002 |
| CH6847 | 1457 429 616 |
| CH6848 | 1457 429 122 |
| CH803APL | 0986 B01 652 |
| CH8081 | 1457 437 003 |
| CH8087 | 1457 429 108 |

| FRAM | BOSCH |
|---|---|
| CH8751 | 0986 B01 557 |
| CH8776 | 1457 429 147 |
| CH8814 | 1457 429 257 |
| CH8980 | 1457 429 152 |
| CH9023 | 1457 429 239 |
| CH9389 | 0986 B01 569 |
| CH9443 | 1457 429 193 |
| CH9528 | 1457 429 185 |
| CH9580 | 0986 B00 701 |
| CH9911 | 0986 B00 709 |
| ● CH9911 | 1457 429 243 |
| CH9973 | 0986 B00 705 |
| ● CH9973 | 1457 429 249 |
| CS3558 | 0986 450 701 |
| G10230 | 0450 902 161 |
| G10230 | 0986 BF0 024 |
| G121 | 0986 BF0 008 |
| G3713 | 0450 905 021 |
| G3736 | 0450 905 203 |
| G3737 | 0450 905 177 |
| G3747 | 0450 905 087 |
| G3829 | 0986 450 234 |
| G4164 | 0450 904 058 |
| ● G5311 | 0450 905 005 |
| G5312 | 0450 902 151 |
| G5471 | 0986 450 238 |
| G5493 | 0986 BF0 023 |
| G5540 | 0450 905 959 |
| G5604 | 0450 905 216 |
| G5738 | 0986 450 144 |
| G5869 | 0450 905 908 |
| G5870 | 0450 905 264 |
| G5870 | 0986 450 236 |
| G5980 | 0986 BF0 026 |
| G5995 | 0986 BF0 018 |
| G6400 | 0986 450 240 |
| G6574 | 0450 905 901 |
| G7099 | 0450 905 324 |
| G7599 | 0450 905 916 |

● Producto discontinuado

| FRAM | BOSCH |
|---|---|
| G7612 | 0986 450 115 |
| G7649 | 0986 450 239 |
| G7729 | 0986 450 230 |
| G8018 | 0450 905 939 |
| G8078 | 0450 905 905 |
| ● G9291 | 0986 BF0 011 |
| G9291 | 0986 BF0 025 |
| G9412 | F026 403 009 |
| G9484 | 0450 905 927 |
| G9527 | 0450 915 001 |
| G9960 | 0450 905 969 |
| HPH6349 | 0986 B01 011 |
| L270 | 0986 B00 710 |
| ● L270 | 1457 429 198 |
| P10688RV | 0986 BF0 405 |
| P10689RV | 0986 BF0 311 |
| P1103A | 0986 450 714 |
| P3401 | 0986 450 713 |
| P3522 | 0986 450 732 |
| P3555PL | 0986 B01 020 |
| P3828 | 0986 B00 007 |
| P4159 | 0986 450 730 |
| P4182 | 0986 450 519 |
| P4182 | 0986 450 731 |
| P4549A | 1457 434 123 |
| P4836 | 0986 450 851 |
| P5138 | 0986 BF0 234 |
| P5173 | 0986 450 722 |
| P5328 | 0986 BF0 400 |
| P5537 | 0986 BF0 309 |
| P5652 | 1457 434 184 |
| P5654 | 1457 434 187 |
| P5661 | 0986 BF0 306 |
| P5672 | 1457 434 291 |
| P5694 | 0986 450 725 |
| P5797 | 0986 450 715 |
| P8935 | 0450 906 357 |
| P8943 | F026 402 035 |
| P9302 | F026 407 060 |

| FRAM | BOSCH |
|---|---|
| P9421 | F026 402 034 |
| P9422 | 0986 BF0 237 |
| P9436 | 0450 905 930 |
| P9452 | 0450 906 376 |
| P9454 | 0986 BF0 368 |
| P9626 | F026 402 017 |
| P9811 | 0450 906 460 |
| P9903 | 0986 BF0 401 |
| ● P9947 | 0450 906 471 |
| P9947 | 0450 907 006 |
| PA4419 | 0986 B02 344 |
| PA520 | 1457 434 103 |
| PFA5693 | F026 404 012 |
| PH 9453 | 0986 B00 511 |
| PH10044 | 0986 B00 512 |
| PH13 | 0986 B00 026 |
| PH2 | 0451 103 333 |
| PH20 | 0986 B01 005 |
| PH2801B | 0986 B01 027 |
| PH2811 | 0451 103 351 |
| PH2811N | 0986 B01 003 |
| PH2821 | 0986 B01 014 |
| PH2821C | 0986 B01 025 |
| ● PH2824 | 0986 B01 031 |
| PH2830 | 0986 B00 035 |
| PH2842 | 0986 B01 000 |
| PH2846 | 0986 B00 037 |
| PH2856 | 0986 B00 006 |
| PH2857A | 0986 B00 057 |
| PH2864 | 0986 B00 032 |
| PH2870A/B | 0986 B00 018 |
| PH2880 | 0451 203 220 |
| PH2883 | 0986 B01 015 |
| PH2954 | 0986 B00 028 |
| PH2956 | 0986 B00 030 |
| PH2960 | 0451 403 001 |
| PH2966 | 0451 103 322 |
| ● PH3562 | 0986 B00 024 |
| PH3562 | 0986 B00 036 |

| FRAM | BOSCH |
|---|---|
| PH3569 | 0986 B01 038 |
| PH3569ST | 0451 103 290 |
| PH3614 | 0986 452 350 |
| PH3900 | 0986 B01 010 |
| PH3976 | 0986 B01 008 |
| PH4468 | 0451 103 271 |
| PH4482 | 0986 B00 017 |
| ● PH4553A | 0986 B01 035 |
| PH4558 | 0986 B00 013 |
| PH4637A | 0986 B01 907 |
| PH4681 | 0451 103 105 |
| PH4701 | 0986 B00 021 |
| PH4703 | 0451 103 299 |
| PH4826 | 0986 B00 010 |
| PH4847A | 0986 B01 001 |
| PH4908 | 0451 103 311 |
| PH4952 | 0451 104 026 |
| PH4967 | 0986 452 028 |
| PH4990A | 0986 B00 033 |
| PH4997 | 0986 452 058 |
| PH4998 | 0986 452 061 |
| PH49A | 0986 B01 018 |
| PH5103 | F026 407 049 |
| PH5123 | 0986 452 062 |
| PH5126 | 0986 452 046 |
| PH5139 | 0451 103 354 |
| PH5190 | 0986 452 064 |
| PH5203 | 0986 B00 510 |
| PH5375 | 0451 103 240 |
| PH5426 | 0986 B00 020 |
| PH5443 | 0986 B01 026 |
| PH5548 | 0986 B00 016 |
| PH5548 | 0986 B00 019 |
| PH5550 | F026 407 005 |
| PH5552 | 0986 B00 004 |
| PH5566/2 | 0986 B00 002 |
| PH5592 | 0451 103 365 |
| PH5645 | 0451 103 297 |
| PH5713 | 0451 103 321 |

| FRAM | BOSCH |
|---|---|
| PH5717 | 0451 103 341 |
| PH5752 | 0451 103 300 |
| PH5796 | 0451 103 332 |
| PH5803 | 0986 B00 003 |
| ● PH5885 | 0451 104 025 |
| PH5885 | 0986 B00 513 |
| PH5949 | 0986 B00 015 |
| PH6355 | 0986 B00 011 |
| PH6607 | 0986 B00 023 |
| PH6811 | 0986 452 354 |
| PH7014 | 0986 B01 023 |
| PH7136 | 0986 B01 012 |
| PH8798 | 0986 B01 004 |
| PH8944 | F026 407 048 |
| PH8994 | 0451 103 313 |
| PH8B | 0451 103 325 |
| PH9 | 0986 B00 014 |
| PH927A | 0451 103 323 |
| PH9503 | 0986 B01 016 |
| PH9566 | 0451 103 363 |
| PH977 | 0986 B01 028 |
| PR3414 | 0986 450 581 |
| PR3414 | 0986 450 583 |
| PR3909 | 0986 450 582 |
| ● PR3941 | 0986 450 706 |
| PS3712 | 0986 450 726 |
| PS4886 | 0986 450 719 |
| PS4922 | 0986 450 721 |
| PS5896 | 0986 BF0 471 |
| PS5989 | 1457 434 402 |
| PS6643 | 0986 450 707 |
| PS6643 | 0986 BF0 217 |
| PS7171 | 0986 450 709 |
| PS8187 | 0986 450 729 |
| PS8187 | 0986 BF0 220 |
| PS8745 | 1457 434 293 |
| PS8784 | 1457 434 440 |
| PS8787 | 0986 450 712 |
| PS8950 | 0450 906 274 |

| FRAM | BOSCH |
|---|---|
| PS8950 | 0450 906 409 |
| PS9013 | 1457 434 194 |
| PS9025 | 0986 450 734 |
| PS9025 | 0986 BF0 222 |
| PS9026 | 0986 450 727 |
| PS9026 | 0986 BF0 223 |
| PS9027 | 0986 BF0 214 |
| PS9028 | 0986 450 708 |
| PS9029 | 0986 450 710 |
| PS9029 | 0986 BF0 219 |
| PS9451 | 0450 906 508 |
| PS9480 | 0450 906 322 |
| PS9514 | F026 402 044 |

● Producto discontinuado

| FREUDENBERG | BOSCH |
|---|---|
| AK X 1375 | 0986 BF0 717 |
| AK X 1394 | 0986 BF0 551 |
| AK X 1937 | 0986 BF0 552 |
| AK X 1953 | 0986 BF0 555 |
| AK X 1962 | 0986 BF0 556 |
| AK X 1970 | 0986 BF0 563 |
| AK X 1983 | 0986 BF0 561 |
| AK X 1984 | 0986 BF0 562 |
| AK X 1985 | 0986 BF0 566 |
| AK X 1987 | 0986 BF0 567 |
| AK X 2001 | 0986 BF0 559 |
| AK X 2004 | 0986 BF0 573 |
| AK X 35110 | 0986 BF0 503 |
| AK X 35115 | 0986 BF0 522 |
| AK X 35125 | 0986 BF0 505 |
| AK X 35128 | 0986 BF0 524 |
| AK X 35132 | 0986 BF0 506 |
| AK X 35141 | 0986 BF0 526 |
| AK X 35145 | 0986 BF0 539 |
| AK X 35151 | 0986 BF0 528 |
| AK X 35157 | 0986 BF0 533 |
| AK X 35159 | 0986 BF0 545 |
| AK X 35163 | 0986 BF0 512 |
| AK X 35164 | 0986 BF0 534 |
| AK X 35174 | 0986 BF0 513 |
| AK X 35181 | 0986 BF0 536 |
| AK X 35264 | 0986 BF0 511 |
| AK X 35279 | 0986 BF0 540 |
| AK X 35285 | 0986 BF0 525 |
| AK X 35322 | 0986 BF0 541 |
| AK X 35346 | 0986 BF0 542 |
| AK X 3536 | 0986 BF0 501 |
| AK X 35370 | 0986 BF0 543 |
| AK X 3546 | 0986 BF0 509 |
| AK X 3548 | 0986 BF0 510 |
| AK X 3562 | 0986 BF0 514 |
| AK X 35634 | 0986 BF0 711 |
| ● AK X 35667 | 0986 BF0 704 |
| AK X 3569 | 0986 BF0 516 |

| FREUDENBERG | BOSCH |
|---|---|
| AK X 35711 | 0986 BF0 713 |
| AK X 35722 | 0986 BF0 714 |
| AKX 35321 | 0986 BF0 515 |
| MC 594 | 1987 432 364 |
| MP 002 | 0986 BF0 504 |
| MP 003 | 0986 BF0 507 |
| MP 005 | 0986 BF0 500 |
| MP 022-2 | 0986 BF0 517 |
| ● MP 027 | 0986 BF0 518 |
| MP 029 | 0986 BF0 519 |
| MP 031 | 0986 BF0 520 |
| MP 038 | 0986 BF0 523 |
| MP 051 | 0986 BF0 527 |
| MP 055 | 0986 BF0 531 |
| MP 071 | 0986 BF0 546 |
| MP 076 | 0986 BF0 537 |
| MP011 | 0986 BF0 574 |

● Producto discontinuado

| HENGST | BOSCH |
|---|---|
| 015 11 | 0450 904 058 |
| ● D 01 E 121 H | 1457 429 610 |
| D 03 E 196 HN | 0986 B01 551 |
| D 11 E 174 14 | 0986 B01 562 |
| D 11 E 251 14 | 0986 B01 561 |
| D 12 E 5 KFR 2 | 0986 450 702 |
| D 14 E 135 H | 1457 429 606 |
| D 16 E 170 HN | 1457 429 274 |
| D 21 E 142 H | 1457 429 122 |
| ● D 22 E 200 H | 1457 429 121 |
| D 24 E 110 28 | 1457 429 638 |
| D 24 E 882 8 | 1457 429 760 |
| D 25 E 153 H | 1457 429 616 |
| D 28 E 1001 H | 1457 429 142 |
| D 34 E 202 H | 1457 429 141 |
| D 35 E 172 37 | 1457 429 275 |
| D 36 500 KP | 1457 429 655 |
| D 37 E 500 H | 1457 429 128 |
| E 113 L | 0986 B03 511 |
| E 10 18 H | 0986 B01 652 |
| E 10 K | 0986 450 696 |
| E 10 KFR | 0986 450 703 |
| E 104 HD 43 | 1457 429 108 |
| E 105 HD 51 | 1457 429 147 |
| E 106 HD 34 | 1457 437 003 |
| E 11 HD 26 | 1457 429 119 |
| E 11 HD 52 | 1457 437 002 |
| E 11 HD 57 | 1457 437 001 |
| E 110 14 | 1457 429 165 |
| E 113 L | 0986 B03 526 |
| E 115 L | 0986 B03 535 |
| E 115 LS | 0986 B03 904 |
| E 116 L | 0986 B03 513 |
| E 116 LS | 0986 B03 905 |
| E 117 L | 0986 B03 515 |
| E 118 L | 0986 B03 536 |
| E 12 HD 53 | 1457 429 139 |
| E 120 M | 0986 B01 500 |
| ● E 152 L | 1457 429 777 |

| HENGST | BOSCH |
|---|---|
| E 154 HD 48 | 0986 B00 707 |
| ● E 154 HD 48 | 1457 429 619 |
| E 171 L | 1457 433 700 |
| E 172 HD 35 | 1457 429 278 |
| E 172 L | 1457 429 787 |
| E 173 L | 1457 433 004 |
| E 175 L | 0986 B02 309 |
| E 19 HD 83 | 0986 B00 708 |
| ● E 19 HD 83 | 1457 429 192 |
| E 193 L | 0450 905 087 |
| E 194 L | 0986 B02 002 |
| E 195 L | 1457 432 111 |
| E 20 20 KLR | 0986 450 730 |
| E 200 M | 0986 B01 502 |
| E 206 L | 0986 B02 316 |
| E 207 L | 1457 433 002 |
| E 21 L | 1457 429 076 |
| E 216 L | 0986 B02 311 |
| E 218 L | 0986 B03 540 |
| E 219 L | 1457 433 735 |
| E 22 HD 88 | 1457 429 199 |
| E 236 L 01 | 1457 433 007 |
| E 240 L 01 | 1457 432 281 |
| E 242 L | 1457 433 699 |
| E 243 L | 1457 433 747 |
| E 250 L | 0986 B02 313 |
| E 253 L | 0986 B02 340 |
| E 2593 LI | 0986 BF0 564 |
| E 27 HD 84 | 1457 429 244 |
| E 28 H 01 D 26 | 1457 429 252 |
| E 283 L | 0986 B03 509 |
| E 290 L | 1457 432 283 |
| E 2925 LI | 0986 BF0 562 |
| E 30 L 02 | 1457 429 875 |
| E 301 L | 0986 B02 310 |
| E 303 L | 1457 433 608 |
| E 305 L | 0986 B02 319 |
| E 31 L 02 | 1457 429 783 |
| E 32 HD 26 | 1457 429 185 |

| HENGST | BOSCH |
|---|---|
| E 32 L | 1457 429 988 |
| E 321 L | 1457 433 752 |
| E 325 L | 0986 B02 304 |
| E 328 L | 1457 432 282 |
| E 329 L | 1457 429 775 |
| E 334 L | 1457 433 227 |
| E 35 HD 102 | 1457 429 193 |
| E 350 HD 44 | 1457 429 152 |
| E 353 L | 1457 433 623 |
| E 354 L | 1457 433 260 |
| E 356 L | 1457 433 697 |
| E 378 L | 1457 433 742 |
| E 379 L | 1457 433 715 |
| E 384 L | 1457 433 616 |
| E 391 L | 0986 B02 328 |
| E 393 L | 0986 B02 053 |
| E 393 L | 1457 433 058 |
| E 396 L | 1457 429 839 |
| E 40 HD 105 | 0986 B00 711 |
| ● E 40 HD 105 | 1457 429 238 |
| E 467 L | 1457 432 202 |
| E 481 L | 1457 433 076 |
| E 59 KPD 78 | 1457 429 656 |
| E 662 L | 1457 433 102 |
| E 677L | 1987 429 183 |
| E 72 KP D107 | 1457 070 007 |
| E 73 L | 1457 429 970 |
| E 75 1 K | 0986 450 695 |
| E 76/1 K | 0986 450 694 |
| E 81 L | 1457 429 992 |
| E 85 KP D146 | 1457 070 008 |
| E 89 L 01 | 0986 B02 018 |
| E 900 LC | 0986 BF0 711 |
| E 900 LI | 0986 BF0 506 |
| E 901 LI | 0986 BF0 501 |
| E 902 LI | 0986 BF0 514 |
| E 904 LI | 0986 BF0 503 |
| E 905 LI | 0986 BF0 574 |
| E 908 LI | 0986 BF0 513 |

| HENGST | BOSCH |
|---|---|
| E 912 LI | 0986 BF0 516 |
| ● E 913 LC | 0986 BF0 704 |
| E 914 LI | 0986 BF0 500 |
| E 921 LI | 0986 BF0 520 |
| E 93 LI | 0986 BF0 505 |
| E 933 LI | 0986 BF0 570 |
| E 935 LI | 0986 BF0 519 |
| E 939 LI | 0986 BF0 507 |
| E 940 LI | 0986 BF0 522 |
| E 941 LI | 0986 BF0 524 |
| E 942 LI | 0986 BF0 517 |
| E 950 LI | 0986 BF0 539 |
| E 951 LI | 0986 BF0 531 |
| E 952 LI | 0986 BF0 527 |
| E 953 LI | 0986 BF0 510 |
| E 959 LI | 0986 BF0 504 |
| E 961 LI | 0986 BF0 512 |
| E 965 LI | 0986 BF0 528 |
| E 968 LI | 0986 BF0 537 |
| E 971 LI | 0986 BF0 533 |
| E 972 LI | 0986 BF0 545 |
| ● E 973 LI | 0986 BF0 518 |
| E 978 LI | 0986 BF0 534 |
| E 979LI | 0986 BF0 543 |
| E160H01D28 | 0986 B01 557 |
| E161H01D28 | 0986 B01 569 |
| E1906LI | 0986 BF0 536 |
| E1911LI | 0986 BF0 546 |
| E1912LC | 1987 432 364 |
| E1915LI | 0986 BF0 576 |
| E1921LI | 0986 BF0 526 |
| E249L | 0986 B02 318 |
| E27H D125 | 0986 B00 709 |
| ● E27H D125 | 1457 429 243 |
| E311L | 1457 433 753 |
| E318L | 1457 433 751 |
| E322L | 1457 433 716 |
| E332L | 1457 433 769 |
| E336L | 1457 433 272 |

| HENGST | BOSCH |
|---|---|
| E342L | 1457 433 711 |
| E352L | 1457 433 513 |
| E377L | 1457 433 588 |
| E381L | 1457 433 537 |
| E382L | 0986 B02 312 |
| E395L | 0986 B02 332 |
| E399L | 1457 433 046 |
| E411L | 0986 B02 331 |
| ● E411L | 1457 433 078 |
| E427L | 0986 B02 371 |
| E430L | 1987 429 603 |
| E436L | 1457 433 150 |
| E44H D110 | 0986 B00 705 |
| ● E44H D110 | 1457 429 249 |
| E45H D113 | 0986 B00 701 |
| E468L | 0986 B02 324 |
| E473L | 1457 433 555 |
| E474L | 0986 B02 506 |
| E478L | 1457 433 090 |
| E488L | 1987 429 404 |
| E493L | 1457 433 152 |
| E495L | 1457 433 158 |
| E53KP D61 | 1457 431 704 |
| E554L | 1457 433 527 |
| E563L | 0986 B03 551 |
| E577L | 1987 429 406 |
| E586L | 0986 B03 009 |
| E586L | 1457 433 270 |
| E58KP | 1457 431 708 |
| E636L | 1457 433 263 |
| E656L | 1457 433 958 |
| E695L | 0986 B02 505 |
| E756L | 1457 433 956 |
| E762L | 1457 433 955 |
| E766L | 1457 433 253 |
| E774L | 0986 B02 051 |
| E798L | 0986 B02 052 |
| ● E798L | 1457 433 311 |
| E828L | 1457 433 743 |

● Producto discontinuado

| HENGST | BOSCH |
|---|---|
| E831L | 1457 433 154 |
| E83KP D140 | 1457 070 001 |
| E911LI | 0986 BF0 525 |
| E977LI | 0986 BF0 523 |
| E992LC | 0986 BF0 713 |
| H 101 W | 0986 B01 003 |
| H 108 WK | 0450 905 905 |
| H 109 WK | 0450 905 901 |
| H 111 WK | 0986 450 236 |
| H 112 WK | 0450 902 161 |
| H 113 WK | 0450 915 003 |
| H 115 WK | 0986 450 230 |
| H 118 WK | 1457 434 187 |
| H 119 WK | 1457 434 184 |
| H 12 W 02 | 0451 103 332 |
| H 123 WK | 0450 906 274 |
| H 124 WK | 0450 906 357 |
| H 128 WK | 0986 450 722 |
| H 129 WK | 0450 906 322 |
| H 13 W 01 | 0986 452 354 |
| H 135 WK | 0450 905 216 |
| H 14 W 06 | 0451 103 105 |
| H 14 W 09 | 0451 103 258 |
| H 14 W 13 | 0451 103 351 |
| H 14 W 23 | 0986 B00 003 |
| H 14 W 24 | 0986 B00 013 |
| H 14 W 27 | 0986 B00 004 |
| H 14/2 W | 0986 B00 018 |
| H 157 WK | 0450 905 952 |
| H 17 W 02 | 0451 103 325 |
| H 17 W 17 | 0451 103 260 |
| H 192 WK | 0450 906 508 |
| H 20 W 02 | 0451 103 299 |
| H 20 W 02 | 0986 B00 002 |
| H 20 W 06 | 0451 103 290 |
| H 200 W 01 | 0986 B01 018 |
| H 200 WN | 0986 B01 020 |
| H 210 W | 0986 B01 031 |
| H 219 WK | 0450 906 471 |

| HENGST | BOSCH |
|---|---|
| H 220 W | 0986 B01 015 |
| H 220 WN | F026 407 049 |
| H 223 WK | 0450 906 429 |
| H 24 W 04 | 0451 103 313 |
| ● H 273 WK | 0450 906 431 |
| H 280 WK | 0450 905 959 |
| H 35 WK | 1457 434 123 |
| H 60 WK | 0986 450 731 |
| H 70 WK | 0986 450 732 |
| H 70 WK | 1457 434 293 |
| H 70 WK 04 | 0986 450 851 |
| H 70 WK 05 | 0986 BF0 400 |
| H 70 WK 08 | 0986 BF0 471 |
| H 70 WK 11 | 0450 905 930 |
| H 70 WK02 | 1457 434 314 |
| H 80 WK 01 | 0450 905 095 |
| H 80 WK 01 | 0450 905 201 |
| H 80 WK 01 | 0450 905 275 |
| H 80 WK 01 | 0986 450 234 |
| H 80 WK 04 | 0450 905 203 |
| H 80 WK 05 | 0450 905 177 |
| H 80 WK 07 | 0450 905 264 |
| H 80 WK 07 | 0986 450 239 |
| H 81 WK 01 | 1457 434 103 |
| H 82 WK 01 | 0986 450 240 |
| H 82 WK 01 | 0986 BF0 018 |
| H 83 WK 01 | 0450 905 021 |
| H 84 WK 02 | 0450 905 324 |
| ● H 85 WK 01 | 0450 905 005 |
| H 90 W 03 | 0986 B00 021 |
| H 90 W 06 | 0451 103 321 |
| H 90 W 11 | 0986 B00 019 |
| H 90 W 12 | F026 407 005 |
| H 90 W 15 | 0451 103 300 |
| H 97 W 02 | 0986 B00 015 |
| H 97 W 03 | 0986 452 061 |
| H 97 W 03 | 0986 B00 023 |
| H 97 W 04 | 0986 452 028 |
| H 97 W 04 | 0986 452 350 |

| HENGST | BOSCH |
|---|---|
| H114WK | 0450 915 001 |
| H12W07 | 0451 103 341 |
| H134WK | 1457 434 291 |
| H142WK | 0986 BF0 306 |
| H146WK | 0450 905 908 |
| H148WK | 0450 905 906 |
| H14W29 | 0451 103 354 |
| H14W32 | 0451 103 322 |
| H153WK | 0450 902 151 |
| H155WK | 0450 905 925 |
| H159WK | 1457 434 194 |
| H17WK07 | 0986 450 721 |
| H189WK | 0450 905 939 |
| H18WDK02 | 1457 434 421 |
| H206W | 0986 452 062 |
| H209W | 0986 B00 011 |
| H20W12 | 0451 103 240 |
| H210WN | 0986 B01 001 |
| H212WK | 1457 434 310 |
| H232WK | 1457 434 440 |
| H241WK | 0986 450 719 |
| H24W05 | 0986 B01 004 |
| H24W06 | 0986 452 064 |
| H262WK | 0450 905 916 |
| H284WK | 0450 906 426 |
| H54WK | 0450 906 460 |
| H70WK09 | 1457 434 402 |
| H90W20 | 0451 103 271 |
| H90W27 | 0451 103 363 |
| H90W29 | 0451 104 026 |
| H96W | 0986 B00 007 |
| H96W01 | 0451 103 365 |
| ● H97W12 | 0451 104 025 |
| H97W12 | 0986 B00 513 |

● Producto discontinuado

| MANN | BOSCH |
|---|---|
| BF 700 | 0986 450 702 |
| BFU 707 | 0986 450 704 |
| BFU 811 | 0986 450 703 |
| BFU 900X | 1457 429 354 |
| C 11 102 | 0986 B03 007 |
| C 11 120 | 1457 433 069 |
| C 1158 | 0986 B02 301 |
| ● C 1184 | 0986 B02 019 |
| C 12 102 | 1457 429 839 |
| C 1241 | 0986 B02 020 |
| ● C 13 100 | 0986 B02 006 |
| C 13 103/1 | 1457 433 275 |
| C 13 114/4 | 0986 B03 534 |
| C 13 114/7 | 0986 B03 506 |
| C 13 122 | 0986 B03 502 |
| C 13 200 | 0986 B03 512 |
| C 1361 | F026 400 018 |
| C 1380 | 1987 429 603 |
| C 1381 | 1457 433 715 |
| C 1387 | 1457 433 161 |
| C 1399 | 0986 B02 005 |
| C 1399/2 | 0986 B02 021 |
| C 14 130 | 1987 429 405 |
| C 14 176 | 1457 433 154 |
| C 14 179 | 0986 B03 551 |
| C 14 200 | 1457 432 286 |
| C 1460 | 1457 433 227 |
| C 1472 | 1457 433 769 |
| C 15 105/1 | 1457 433 588 |
| C 15 127/2 | 1457 432 285 |
| C 15 165/3 | 0986 B03 526 |
| C 15 300 | 0986 B03 002 |
| ● C 1550 | 0986 B02 023 |
| C 16 010 | 0986 B03 014 |
| C 16 113 | 0986 B02 024 |
| C 16 134/1 | 0986 B02 041 |
| ● C 16 136 | 0986 B03 504 |
| ● C 16 190x | 0986 B03 524 |
| C 16 244 | 0986 B03 566 |

| MANN | BOSCH |
|---|---|
| ● C 16 247/1 | 0986 B03 009 |
| C 16 247/1 | 1457 433 270 |
| C 16 400 | 0986 B03 004 |
| C 1699 | 0986 B03 553 |
| C 17 006 | 0986 B02 512 |
| C 17 129 | 0986 B03 554 |
| C 17 225/3 | 0986 B03 511 |
| ● C 17 232 | 0986 B03 544 |
| C 17 278 | 1457 432 282 |
| C 17 308 | 0986 B03 531 |
| C 1724 | F026 400 054 |
| C 1733 | 0986 B02 331 |
| C 1760 | 0986 B02 025 |
| C 1760/1 | 0986 B02 026 |
| C 18 114 | F026 400 029 |
| C 18 142 | 0986 B03 500 |
| C 18 263 | 1457 432 287 |
| C 1858/2 | 0986 B02 333 |
| ● C 1858/2 | 0986 B02 360 |
| ● C 1932 | 1457 433 078 |
| C 1944 | 0986 B02 314 |
| ● C 20 164 | 1457 433 517 |
| C 20 325/2 | 0986 B03 535 |
| C 20 457 | 1457 432 289 |
| C 20 500 | 0986 B03 001 |
| C 2055 | 1457 433 955 |
| C 2056 | 1457 433 711 |
| C 21 003 | 0986 B02 376 |
| C 21 004 | 0986 B02 374 |
| C 21 116/1 | F026 400 010 |
| ● C 21 367 | 1987 429 605 |
| C 21 470 | 0986 B03 008 |
| C 21 493 | 0986 B03 519 |
| C 2120 | 0986 B02 002 |
| ● C 2129 | 1457 433 961 |
| C 2159 | 0986 B02 312 |
| C 2192 | 0986 B02 016 |
| C 2192/2 | 0986 B02 500 |
| C 22 024 | 0986 B03 013 |

| MANN | BOSCH |
|---|---|
| C 22 113 | 0986 B03 570 |
| ● C 22 181 | 0986 B03 501 |
| C 2214 | 0986 B02 508 |
| C 2237 | 1457 433 306 |
| C 2240 | F026 400 098 |
| C 2245 | 1457 433 100 |
| C 2256 | 0986 B02 313 |
| C 2282 | 1457 433 743 |
| C 2287 | 1457 433 585 |
| C 2295 | 0986 B02 334 |
| C 2295/2 | 0986 B02 371 |
| C 2295/3X | 0986 B02 332 |
| C 23 107 | 0986 AF2 180 |
| C 23 121/2 | 1987 429 602 |
| C 23 148 | 1457 433 002 |
| C 23 440/1 | 0986 B03 513 |
| C 23 610 | 0986 B03 006 |
| C 2324 | 0986 B02 517 |
| C 2337 | 1457 433 956 |
| C 24 028 | 0986 B02 037 |
| C 24 106 | 1457 433 751 |
| ● C 24 123/1 | 1457 433 075 |
| C 24 128 | 1457 433 771 |
| C 24 137/1 | 1457 433 583 |
| C 24 203 | 0986 B03 571 |
| C 24 393 | 1457 433 735 |
| ● C 24 578 | 1457 432 280 |
| ● C 24 650 | 0986 B03 514 |
| C 24 650/1 | 0986 B03 515 |
| ● C 24 650/3 | 0986 B03 555 |
| C 2436/1 | 1457 432 111 |
| C 2448 | F026 400 037 |
| C 2493 | 1457 433 697 |
| C 2496 | 0986 B02 305 |
| ● C 25 100/1 | 0986 B02 304 |
| C 25 101/1 | 1457 433 090 |
| C 25 114 | 1457 433 004 |
| C 25 115 | 0986 B02 513 |
| C 25 116 | 0986 B02 356 |

| MANN | BOSCH |
|---|---|
| C 25 117/2 | 1457 433 150 |
| C 25 118/1 | 0986 B02 369 |
| C 25 660/2 | F026 400 074 |
| C 2512 | 1987 429 406 |
| C 2535 /1C | 1457 429 953 |
| C 2538 | 1457 433 573 |
| C 2555/2 | 0986 B02 028 |
| C 2571 | 1457 433 253 |
| C 2571/1 | 0986 B02 303 |
| C 2585 | 0986 B02 306 |
| ● C 2598 | 1457 433 512 |
| C 26 106 | 0986 B02 507 |
| C 26 109 | 1457 429 078 |
| C 26 111 | 0986 B02 307 |
| C 26 138/1 | 0986 B02 319 |
| C 26 168 | 0986 B02 316 |
| C 26 206/1 | 1457 433 772 |
| C 2620 | F026 400 017 |
| C 2631 | F026 400 044 |
| C 2646 | 0986 B02 009 |
| C 2648 | 0986 B02 017 |
| ● C 2663 HD | 0986 B03 556 |
| C 2667/1 | 1457 433 605 |
| C 2677 | 0986 B02 320 |
| C 2681 | 1457 433 338 |
| C 2686 | 0986 B02 052 |
| ● C 2686 | 1457 433 311 |
| C 2693 | 0986 B02 322 |
| ● C 27 103 | 1457 433 266 |
| C 27 124 | 1457 433 555 |
| C 27 1340 | 0986 B03 010 |
| C 27 154/1 | 0986 B02 309 |
| C 27 192/1 | 1457 433 046 |
| ● C 27 798 | 0986 B03 520 |
| C 27 830 | 0986 B03 003 |
| C 27 844 | 0986 B03 537 |
| C 27 902 | 1457 432 288 |
| C 2731/1 | 1457 433 958 |
| C 2766 | 0986 B02 030 |

| MANN | BOSCH |
|---|---|
| C 2771 | 0986 B02 335 |
| C 2776 | 0986 B02 323 |
| C 2788 | 1457 433 792 |
| ● C 2791 | 1457 432 290 |
| C 28 100 | 0986 B02 042 |
| C 28 105 | 1457 433 152 |
| C 28 131 | 0986 B02 501 |
| C 28 136/1 | 0986 B02 311 |
| ● C 28 214/1 | 1457 433 537 |
| C 2851 | 1987 429 181 |
| C 2852/2 | 0986 B02 018 |
| C 2874 | 0986 B02 336 |
| C 2887 | 0986 B02 032 |
| C 29 003 | 0986 B02 510 |
| C 29 010 | 1457 433 560 |
| C 29 108 | 0986 B02 308 |
| C 29 118 | 1457 433 263 |
| C 29 126/2 | 1457 429 875 |
| C 29 198 | 1457 433 747 |
| C 2953/1 | 1457 429 954 |
| C 2964 | 1987 429 051 |
| C 2970 | 0986 B02 317 |
| C 2973 | 0986 B02 337 |
| C 2975 | 1987 429 189 |
| C 2982/1 | 0986 B02 321 |
| C 2987/1 | 0986 B02 051 |
| C 2998/5 | 0986 B02 324 |
| C 30 125/1 | 0986 B02 328 |
| C 30 130/3 | 1457 433 513 |
| C 30 1359 | 1457 432 283 |
| C 30 139 | 1457 433 094 |
| C 30 1500 | 1457 433 904 |
| C 30 161 | F026 400 109 |
| C 30 1622 | 1457 432 284 |
| C 30 195/2 | 1457 433 752 |
| ● C 30 703 | 0986 B03 540 |
| C 30 850/2 | 0986 B03 536 |
| C 30 880/2 | 0986 B03 509 |
| C 3032/1 | 0986 B02 502 |

● Producto discontinuado

| MANN | BOSCH |
|---|---|
| C 3033 | 1987 429 180 |
| C 3034 | 1457 429 775 |
| C 3042/1 | 1457 433 623 |
| C 3074 | 0986 B02 338 |
| C 3087 | 1457 433 076 |
| C 3087/1 | 0986 B02 503 |
| C 3092 | 0986 B03 573 |
| C 31 003/1 | 0986 B02 504 |
| C 31 101/1 | 1987 429 135 |
| C 31 1093/2 | 0986 B03 521 |
| C 31 1254 | 1457 433 042 |
| C 31 1410 | F026 400 083 |
| ● C 31 152/1 | 1457 429 777 |
| C 3167/1 | 1457 433 007 |
| C 3173 | 0986 B02 339 |
| C 32 108 | 1457 433 596 |
| C 32 120/1 | 0986 B02 340 |
| C 32 123/1 | 1457 433 527 |
| C 32 130 | F026 400 157 |
| C 32 1420/2 | F026 400 080 |
| C 32 154 | 1457 433 742 |
| C 32 154/1 | 0986 B02 341 |
| C 32 1752 | F026 400 086 |
| C 32 191/1 | F026 400 007 |
| C 32 199 | 0986 B03 574 |
| C 32 338/1 | 1457 432 281 |
| ● C 3224 | 0986 B02 033 |
| C 3230 | 1987 429 183 |
| C 3251 | 0986 B02 342 |
| C 3282 | 0986 B02 505 |
| C 33 102 | 1457 433 700 |
| C 33 1465/1 | F026 400 078 |
| C 33 156 | 0986 B02 343 |
| ● C 33 1600/2 | F026 400 077 |
| C 33 1600/2 | F026 400 288 |
| C 33 256 | 1457 433 753 |
| C 3324 | 1987 429 191 |
| C 3366 | 0986 B03 575 |
| C 3377 | 1457 433 260 |

| MANN | BOSCH |
|---|---|
| C 34 109 | 0986 B02 344 |
| C 34 116/1 | 0986 B02 318 |
| ● C 34 1500 | 0986 B03 523 |
| C 34 175 | 1457 433 699 |
| C 3468/1 | 1457 433 158 |
| C 3471 | 1457 432 202 |
| C 3474 | 1457 429 076 |
| C 3485/2 | 0986 B02 518 |
| C 3485/2 | 1457 433 325 |
| C 3495 | 0986 B02 511 |
| C 3498 | 1457 433 047 |
| C 35 110 | 1457 433 591 |
| C 35 154 | 1987 429 404 |
| C 3577 | 0986 B02 345 |
| C 3585 | 0986 B02 509 |
| C 3594 | 1457 433 272 |
| C 36 002 | F026 400 151 |
| C 36 003 | 0986 B02 515 |
| C 36 005 | 0986 B02 373 |
| C 36 188 | 0986 B02 378 |
| C 37 001 | 0986 B02 516 |
| C 37 107 | 1457 429 992 |
| C 37 132 | 0986 B02 053 |
| C 37 132 | 1457 433 058 ● |
| C 37 148 | 1457 433 608 |
| C 37 153/1 | 0986 B02 310 |
| C 37 1774 | 0986 B03 522 |
| C 38 163/1 | 1457 429 783 |
| C 3875 | 0986 B02 506 |
| C 3877/1 | F026 400 002 |
| C 39 219 | 1987 429 190 |
| C 40 124 | 1457 433 616 |
| C 40 163 | 1457 433 594 |
| C 41 110 | 1457 433 102 |
| C 41 121 | 1457 429 787 |
| C 41 135 | 1987 429 606 |
| C 41 173 | 1457 429 970 |
| C 4151 | 0986 B02 325 |
| C 4287/2 | 1457 433 716 |

| MANN | BOSCH |
|---|---|
| C 4292 | 0986 B02 354 |
| C 43 102 | 0986 B02 377 |
| C 48 183 | 1457 429 988 |
| C 60 230 | 1457 433 601 |
| C 911X2 | F026 404 008 |
| CF 1000 | 0986 B03 904 |
| CF 1200 | 0986 B03 905 |
| ● CF 1310 | 1987 429 608 |
| CF 1520 | 0986 B03 406 |
| CF 300 | 0986 B03 400 |
| CF 400 | 0986 B03 402 |
| CF 500 | 0986 B03 408 |
| CF 600/1 | 0986 B03 403 |
| CF 700 | 0986 B03 902 |
| CF 800 | 0986 B03 903 |
| CU 1722 | 1987 432 153 |
| CU 1738 | 1987 432 056 |
| CU 1828 | 0986 BF0 556 |
| CU 1835 | 0986 BF0 552 |
| CU 1919 | 0986 BF0 558 |
| CU 1936 | 0986 BF0 555 |
| CU 20 001 | 0986 BF0 717 |
| CU 2012 | 1987 432 171 |
| CU 2035 | 1987 432 088 |
| CU 2038 | 1987 431 011 |
| CU 21 003 | 0986 BF0 554 |
| CU 21-000-2 | 1987 432 136 |
| CU 2141 | 0986 BF0 657 |
| CU 2143 | 0986 BF0 714 |
| CU 2143 | 1987 432 111 |
| CU 2184 | 1987 431 167 |
| CU 22002/2 | 0986 BF0 563 |
| CU 2225 | 0986 BF0 522 |
| CU 2240 | 1987 432 069 |
| CU 2245 | 0986 BF0 576 |
| CU 2253 | 0986 BF0 519 |
| CU 23 002 | 0986 BF0 551 |
| CU 2327/2 | 0986 BF0 536 |
| CU 2336 | 0986 BF0 562 |

| MANN | BOSCH |
|---|---|
| CU 2344 | 0986 BF0 539 |
| CU 2351 | 1987 432 053 |
| CU 24 006 | 0986 BF0 637 |
| CU 2433 | 0986 BF0 542 |
| CU 2434 | 0986 BF0 566 |
| ● CU 2436 | 0986 BF0 589 |
| CU 2436 | 1987 432 415 |
| CU 2442 | 0986 BF0 587 |
| CU 2504 | 0986 BF0 541 |
| CU 2525 | 0986 BF0 527 |
| CU 2545 | 0986 BF0 512 |
| CU 2621 | 0986 BF0 543 |
| CU 2629 | 0986 BF0 515 |
| CU 2631 | 0986 BF0 573 |
| CU 2655 | 0986 BF0 534 |
| CU 2672 | 0986 BF0 520 |
| CU 2734 | 0986 BF0 565 |
| CU 2745 | 0986 BF0 517 |
| CU 2757 | 0986 BF0 525 |
| CU 2835 | 0986 BF0 507 |
| CU 2842 | 0986 BF0 575 |
| CU 2861 | 0986 BF0 509 |
| CU 2882 | 0986 BF0 506 |
| CU 2897 | 0986 BF0 500 |
| CU 29 003-2 | 0986 BF0 656 |
| CU 2939 | 1987 432 097 |
| CU 2940 | 0986 BF0 546 |
| CU 2945 | 0986 BF0 550 |
| CU 2951 | 0986 BF0 505 |
| CU 2952 | 0986 BF0 564 |
| CU 3032 | 0986 BF0 528 |
| CU 3037 | 1987 431 071 |
| CU 3054 | 0986 BF0 511 |
| ● CU 3136 | 0986 BF0 518 |
| CU 3138 | 0986 BF0 577 |
| CU 3162 | 0986 BF0 540 |
| CU 3337 | 0986 BF0 545 |
| CU 3338 | 0986 BF0 504 |
| CU 3360 | 0986 BF0 531 |

| MANN | BOSCH |
|---|---|
| CU 3448 | 0986 BF0 533 |
| CU 3455 | 0986 BF0 514 |
| CU 3518 | 1987 432 412 |
| CU 3554 | 0986 BF0 513 |
| CU 3567 | 0986 BF0 524 |
| CU 3569 | 0986 BF0 658 |
| CU 3858 | 0986 BF0 516 |
| CU 3942 | 0986 BF0 526 |
| CU 3955 | 0986 BF0 574 |
| CU 4151 | 0986 BF0 503 |
| CU 4251 | 0986 BF0 501 |
| CU 4442 | 0986 BF0 510 |
| CU 5257 | 0986 BF0 537 |
| CU 5480 | 1987 431 028 |
| CU 5877 | 0986 BF0 570 |
| CU 6724 | 0986 BF0 523 |
| CUK 2338 | 1987 432 364 |
| CUK 2422 | 0986 BF0 713 |
| CUK 2742 | 1987 432 311 |
| CUK 2862 | 0986 BF0 711 |
| ● CUK 3780 | 0986 BF0 704 |
| H 1019 | 0986 B00 500 |
| H 1164 | 0986 B01 554 |
| H 12 110/2x | 0986 B01 561 |
| H 12 111 | 0986 B01 565 |
| H 1275 X | 0986 B01 562 |
| H 601/4 | 0986 B01 652 |
| H 614N | 1457 429 606 |
| H 710/1N | F026 404 006 |
| H 813/3 | 0986 B01 750 |
| H 820/3X | 0986 B01 567 |
| H 829/1X | 1457 429 616 |
| ● H 929X | 1457 429 610 |
| H 932/4 | 0986 B01 555 |
| ● H 943/7X | 1457 429 121 |
| H 947/1 | 0986 B01 556 |
| HU 12 110X | F026 407 042 |
| HU 12 140x | 1457 429 128 |
| HU 610X | 1457 429 147 |

● Producto discontinuado

| MANN | BOSCH |
|---|---|
| HU 611x | 0986 B00 701 |
| HU 612/1X | 1457 429 306 |
| HU 612/2x | F026 407 006 |
| HU 612X | 1457 429 193 |
| HU 615/3X | 1457 429 272 |
| HU 7008 Z | 0986 B00 706 |
| ● HU 7008 Z | F026 407 023 |
| HU 711/51X | 0986 B00 705 |
| ● HU 711/51X | 1457 429 249 |
| HU 711X | 1457 429 257 |
| HU 712/6X | 1457 429 301 |
| HU 713/1X | 1457 429 256 |
| HU 715/4X | 1457 429 108 |
| HU 716/2X | 0986 B00 711 |
| ● HU 716/2X | 1457 429 238 |
| HU 718/1k | 1457 437 001 |
| HU 718/1n | 1457 437 002 |
| HU 718/1z | 1457 429 119 |
| HU 719/3 X | F026 407 071 |
| HU 719/6 X | 0986 B00 709 |
| ● HU 719/6 X | 1457 429 243 |
| HU 719/7x | 0986 B00 708 |
| ● HU 719/7x | 1457 429 192 |
| HU 719/8 X | 1457 429 244 |
| HU 721/4X | 1457 429 252 |
| HU 722X | 1457 429 185 |
| HU 726/2x | 0986 B00 707 |
| ● HU 726/2x | 1457 429 619 |
| HU 727/1x | 1457 429 122 |
| HU 816/2X | 0986 B00 702 |
| HU 816X | 1457 429 269 |
| HU 818X | 1457 429 118 |
| HU 820 X | 1457 429 199 |
| HU 821/X | F026 407 008 |
| HU 831X | F026 407 002 |
| HU 842X | 1457 429 152 |
| HU 848/1x | 1457 429 139 |
| HU 920X | 1457 429 239 |
| HU 921x | 1457 429 760 |

| MANN | BOSCH |
|---|---|
| HU 923 X | 0986 B00 710 |
| ● HU 923 X | 1457 429 198 |
| HU 924/2X | 1457 429 275 |
| HU 925/4X | 1457 437 003 |
| HU 926/3X | 1457 429 638 |
| HU 931/5 | 0986 B01 557 |
| HU 932/6n | 1457 429 142 |
| HU 932/8 X | 0986 B01 576 |
| HU 938/4x | 1457 429 141 |
| HU 945/2 | 0986 B01 569 |
| HU 951x | 1457 429 278 |
| P 1234 | 0986 450 701 |
| P 707/6 | 0986 BF0 200 |
| P 716 | 0986 BF0 204 |
| P 716/1x | 0986 BF0 205 |
| P 718/1X | 0986 BF0 231 |
| P 722 | 0986 BF0 225 |
| P 732x | 1457 429 656 |
| P 733/1X | 0986 BF0 210 |
| P 735 | 0986 BF0 206 |
| P 78 | 0986 BF0 211 |
| P 811 | 0986 450 696 |
| P 917 | 0986 450 695 |
| P 917/1 | 0986 BF0 420 |
| P 919/7 | 1457 429 165 |
| P 939/1 | 0986 BF0 421 |
| P 945x | 0986 450 694 |
| PF 1050/1N | 1457 429 274 |
| ● PF 1055/1n | 0986 B01 551 |
| PF 1155n | 0986 B01 500 |
| ● PF 1190x | 0986 B01 502 |
| PF 420 | 0986 BF0 350 |
| ● PFU 19 326x | 0986 B01 501 |
| PU 1018X | 1457 431 723 |
| PU 1021x | 0986 BF0 207 |
| PU 1046 x | 0986 BF0 201 |
| PU 7002X | F026 402 007 |
| PU 723x | 1457 070 001 |
| PU 742 | 1457 431 708 |

| MANN | BOSCH |
|---|---|
| PU 822x | 0986 BF0 208 |
| PU 825X | 1457 070 008 |
| PU 830 X | 0986 BF0 423 |
| ● PU 830 X | 1457 070 000 |
| PU 835 X | 0986 AF6 100 |
| PU 839x | 1457 431 704 |
| PU 9001 X | F026 402 062 |
| PU 922x | 0986 BF0 209 |
| PU 936 X// PU | 1457 070 007 |
| 936/2 X | 1457 070 013 |
| PU 936/1 X | F026 402 008 |
| ● PU 936/1 X | 1457 429 655 |
| PU 999/1x | 0986 B02 034 |
| TA 130 | 0986 B02 031 |
| TA 71 | F026 404 012 |
| TB 1374X | 0986 B00 008 |
| W 1035 | 0451 403 001 |
| W 11 102 | 0986 B01 018 |
| W 11 102/36 | 0451 104 010 |
| W 11102/35 | 0986 B00 007 |
| W 1114/80 | 0986 B00 030 |
| W 1126/4 | 0986 B01 023 |
| W 1167/2 | 0986 B01 012 |
| W 1168/5 | 0986 B01 015 |
| W 1170 | F026 407 048 |
| W 1170/7 | 0986 B01 016 |
| W 1323 | 0451 103 276 |
| W 610/1 | 0986 B00 015 |
| W 610/3 | 0451 104 025 |
| ● W 66 | 0986 B00 513 |
| W 66 | 0986 452 061 |
| W 67/1 | 0986 452 058 |
| W 67/2 | 0986 B00 023 |
| W 68 | 0986 452 350 |
| W 68/1 | 0986 452 028 |
| W 68/3 | 0986 B00 512 |
| W 7008 | F026 407 078 |
| ● W 7008 | 0451 103 300 |
| W 712/16 | 0451 103 271 |

| MANN | BOSCH |
|---|---|
| W 712/21 | 0986 B00 021 |
| W 712/22 | 0451 103 322 |
| W 712/37 | F026 407 005 |
| W 712/38 | 0451 103 297 |
| W 712/41 | 0451 103 321 |
| W 712/43 | 0451 103 299 |
| W 712/47 | 0986 B00 016 |
| W 712/52 | 0986 B00 019 |
| W 712/52 | 0451 103 363 |
| W 712/73 | 0986 B00 002 |
| W 712/8 | F026 407 017 |
| W 712/82 | 0986 B00 032 |
| W 712/9 | F026 407 079 |
| W 712/94 | 0451 104 026 |
| W 713/15 | 0986 B00 013 |
| W 713/16 | 0986 B00 033 |
| W 713/19 | 0986 B00 017 |
| W 713/4 | 0451 103 351 |
| W 714/3 | 0451 103 354 |
| W 714/4 | 0451 103 105 |
| W 719/13 | 0451 103 258 |
| W 719/14 | 0986 B00 003 |
| W 719/27 | 0986 B00 004 |
| W 719/30 | F026 407 080 |
| W 719/45 | 0986 B00 018 |
| W 719/5 | 0986 B00 055 |
| W 719/50 | 0451 103 332 |
| W 75/3 | 0986 B01 031 |
| ● W 8005 | 0986 452 354 |
| W 811/80 | 0986 B00 028 |
| W 811/81 | 0986 B00 024 |
| ● W 815/80 | 0986 B00 009 |
| ● W 818/16 | 0451 103 290 |
| W 830/1 | F026 407 018 |
| W 830/3 | 0986 B00 035 |
| W 910/1 | 0986 B00 036 |
| W 914/13 | 0986 B00 056 |
| W 914/24 | 0451 103 341 |
| W 914/26 | 0986 B00 037 |

| MANN | BOSCH |
|---|---|
| W 914/7 | 0451 103 323 |
| W 915/9 | 0451 103 311 |
| W 920/11 | 0986 B00 014 |
| W 920/21 | 0986 B00 006 |
| W 920/25 | 0986 B01 035 |
| W 920/32 | 0986 B00 510 |
| W 920/34 | 0451 103 260 |
| W 920/38 | 0451 103 333 |
| W 920/45 | 0986 452 003 |
| W 920/48 | 0986 B01 003 |
| W 920/7 | 0986 B00 020 |
| W 923 | 0986 B01 014 |
| W 925/A | 0986 B01 026 |
| W 927/1 | 0986 B01 004 |
| W 930/14 | 0986 B00 057 |
| W 930/20 | 0451 103 313 |
| W 930/21 | 0451 103 240 |
| W 932 | 0986 B01 025 |
| W 934 | 0986 B01 005 |
| W 936/4 | 0986 B00 026 |
| W 936/8 | 0986 B01 038 |
| W 940 | 0451 103 325 |
| W 940/1 o W | 0986 B01 000 |
| 940/81 | 0986 B01 010 |
| W 940/18 | 0451 203 220 |
| W 940/34 | 0986 B01 008 |
| W 950 | 0986 B00 511 |
| W 950/18 | 0986 B00 010 |
| W 950/26 | 0986 B01 028 |
| W 950/35 | 0986 B01 907 |
| W 950/7 | 0986 B01 027 |
| W 950/8 | 0986 450 583 |
| W 962 | 0986 450 582 |
| WA 921/1 | 0986 450 581 |
| WA 923 | F026 402 017 |
| WA 956 | F026 402 035 |
| WDK 11 102/9 | 0986 450 710 |
| WDK 962/16 | 0986 BF0 219 |
| WK 1030 | 0986 450 709 |

● Producto discontinuado

| MANN | BOSCH |
|---|---|
| WK 1030 | 0986 BF0 220 |
| WK 1040 | 0986 450 727 |
| WK 1040 | 0986 BF0 223 |
| WK 1050/1 | 0986 BF0 214 |
| WK 1050/1 | 0986 450 734 |
| WK 1060 | 0986 BF0 222 |
| WK 1060/1 | 0986 BF0 221 |
| WK 1060/1 | 0986 BF0 232 |
| WK 1060/2 | 0986 BF0 213 |
| WK 1060/3x | 0986 BF0 212 |
| WK 1060/4 | 0986 450 723 |
| WK 1060/6 X | F026 402 034 |
| WK 1124 | 0986 450 708 |
| WK 1149 | 0986 450 717 |
| WK 1156 | 0450 904 058 |
| WK 1162 | 0986 BF0 008 |
| WK 31/2 | 0986 450 230 |
| WK 42/1 | 0450 905 939 |
| WK 510 | 0986 BF0 023 |
| WK 512/1 | 0450 905 901 |
| WK 513 | 0450 905 905 |
| WK 516 | 0450 905 952 |
| WK 516/1 | 0450 905 969 |
| WK 532/1 | 0986 BF0 018 |
| WK 55/3 | 0450 905 925 |
| WK 58 | 0450 902 161 |
| WK 59 X | 0986 BF0 024 |
| WK 6002 | 0986 BF0 011 |
| WK 6002 | 0986 BF0 025 |
| ● WK 612/7 | 0986 450 240 |
| WK 612/7 | 0450 902 151 |
| WK 613 | 0450 905 005 |
| WK 613/1 | 0986 450 144 |
| ● WK 613/2 | 0986 450 239 |
| WK 613/3 | 0986 450 115 |
| WK 613/4 | F026 403 009 |
| WK 614/36 | 0450 905 021 |
| WK 614/46 | 0450 905 095 |
| WK 618 | 0450 905 916 |

| MANN | BOSCH |
|---|---|
| WK 618 | 0450 905 959 |
| WK 68/1 | F026 403 006 |
| WK 69 | 0450 915 001 |
| WK 69/2 | 0986 BF0 026 |
| WK 711/1 | 0986 450 730 |
| WK 712/4 | 1457 434 291 |
| WK 716 | 0986 450 728 |
| WK 718/2 | 0450 915 003 |
| WK 719/6 | 1457 434 440 |
| WK 720 | 0986 450 519 |
| WK 720/2X | 0450 905 906 |
| WK 723 | 1457 434 154 |
| WK 725 | 0450 905 264 |
| WK 727 | 0986 450 236 |
| WK 730/1 | 0450 905 927 |
| WK 730/1 | 0986 450 731 |
| WK 730/5 | 0986 450 712 |
| WK 731 | 0450 905 324 |
| WK 758 | 0986 450 722 |
| WK 79 | 1457 434 123 |
| WK 815 | 1457 434 437 |
| WK 817/3x | 0450 906 409 |
| WK 820/1 | 0986 450 509 |
| WK 823 | 0450 906 426 |
| WK 823/1 | F026 402 010 |
| WK 823/3 x | 0986 450 721 |
| WK 824/1 | 0450 906 508 |
| WK 828X | 0450 905 203 |
| WK 829/3 | 0450 905 087 |
| WK 830/3 | 0986 450 234 |
| WK 830/6 | 0450 905 275 |
| WK 830/7 | 1457 434 103 |
| WK 831 | 0986 BF0 309 |
| WK 832 | 0450 906 274 |
| WK 836 | 0450 905 930 |
| WK 841 | 0986 BF0 308 |
| WK 842/13 | F026 402 044 |
| WK 842/14 | 0986 450 732 |
| WK 842/18 | 0450 906 429 |

| MANN | BOSCH |
|---|---|
| WK 842/2 | F026 402 056 |
| WK 842/21x | 0986 450 851 |
| WK 842/23X | 0986 BF0 400 |
| WK 842/3 | 1457 434 194 |
| WK 842/4 | 0450 905 177 |
| WK 842/8 | 1457 434 184 |
| WK 845 | 0986 BF0 306 |
| WK 845/1 | 1457 434 187 |
| WK 845/3 | 0986 BF0 311 |
| WK 845/4 | 0450 905 216 |
| WK 846 | 0450 905 908 |
| WK 849 | 1457 434 400 |
| WK 850 | 0450 906 322 |
| ● WK 850/2 | 0450 906 376 |
| WK 853/12 | 0986 BF0 401 |
| WK 853/13 | 0450 906 431 |
| WK 853/15 | 0986 BF0 365 |
| ● WK 853/17 | 0986 BF0 366 |
| WK 853/19 | 0986 BF0 471 |
| WK 853/22 | 0450 906 357 |
| WK 853/3 | 1457 434 293 |
| WK 853/7 | 1457 434 310 |
| WK 853/8 | 1457 434 314 |
| WK 854/1 | F026 402 019 |
| WK 854/6 | 0986 BF0 238 |
| WK 9007 | 0986 450 720 |
| WK 9045 | 0986 BF0 216 |
| WK 920/3 | 0450 906 460 |
| WK 933X | 0450 906 471 |
| WK 939 | 0450 907 006 |
| ● WK 939/2 | 0450 906 469 |
| WK 939/2 | 0450 906 468 |
| WK 939/5 | 0986 450 726 |
| WK 939/6 | 0986 BF0 224 |
| WK 940/1 | 0986 450 719 |
| WK 940/1 | 0986 450 715 |
| WK 940/11 | 0986 BF0 237 |
| WK 940/12 | 1457 434 421 |
| WK 940/2 | 0986 BF0 355 |

| MANN | BOSCH |
|---|---|
| WK 940/20 | 0986 450 707 |
| WK 940/22 | 0986 BF0 217 |
| WK 940/24 | 0986 BF0 215 |
| WK 940/24 | 0986 BF0 405 |
| WK 940/26 | 0986 BF0 234 |
| WK 940/35 | 0986 450 713 |
| WK 940/6 | 0986 450 718 |
| WK 940/7 | 0986 450 729 |
| WK 950/13 | 0986 BF0 218 |
| WK 950/14 | F026 402 036 |
| WK 950/14 | 0986 BF0 368 |
| WK 950/19 | 0986 BF0 235 |
| WK 950/21 | 1457 434 180 |
| WK 950/26X | 1457 434 402 |
| WK 950/3 | 0986 450 714 |
| WK 950/6 | 0986 BF0 369 |
| WK 955/2 | 0986 450 725 |
| WK 962/13 | 0986 BF0 462 |
| WK 962/7 | 0986 BF0 236 |
| ● WK 965 | 0451 103 365 |
| WK 965/1 | 0986 B01 020 |
| WP 1026 | 0986 B01 001 |
| WP 11 102/3 | F026 407 049 |
| WP 1144 | 0986 B01 043 |
| WP 1169 | 0986 B01 011 |
| WP 12 121 | 0986 452 064 |
| WP 12 300 | 0986 452 062 |
| WP 920/80 | 0986 B00 011 |
| WP 928/80 | 0986 452 046 |
| WP 928/81 | F026 407 106 |
| WP 928/82 | 0986 BF0 302 |
| WP 940/4 | 0986 B03 505 |
| ● WP 962/3x | F026 407 060 |
| XXXX | |
| ZR 904X | |

● Producto discontinuado

| MAHLE | BOSCH |
|---|---|
| HC45 | 0986 B00 017 |
| HX 15 | 0986 B01 652 |
| K6 | 0986 450 731 |
| KC 18 | 0986 450 732 |
| KC 24 | 0986 450 519 |
| KC 75 | 0986 450 725 |
| KC 94 | 0986 450 715 |
| KC107 | 0986 450 713 |
| KC118 | 0986 BF0 224 |
| KC119 | 0986 450 707 |
| KC119 | 0986 BF0 217 |
| KC120 | 0986 450 726 |
| KC120 | 0986 BF0 218 |
| KC121 | 0986 450 710 |
| KC121 | 0986 BF0 219 |
| KC122 | 0986 450 709 |
| KC122 | 0986 BF0 220 |
| KC123 | 0986 BF0 221 |
| KC124 | 0986 450 734 |
| KC124 | 0986 BF0 222 |
| KC125 | 0986 450 727 |
| KC125 | 0986 BF0 223 |
| KC126 | 0986 BF0 214 |
| KC129 | 0986 450 712 |
| KC130 | 0986 450 706 |
| KC131 | 0986 450 705 |
| KC132 | 0986 450 722 |
| KC166 | 0986 450 728 |
| KC171 | F026 402 034 |
| KC46 | 0986 450 719 |
| KC51 | 0986 BF0 309 |
| KC83 | 0986 450 721 |
| KL100/2 | 0450 905 930 |
| KL147D | 0986 BF0 471 |
| KL156/3 | F026 403 006 |
| KL173 | 0450 906 357 |
| KL174 | F026 402 044 |
| KL181 | 0450 905 939 |
| KL2 | 0986 450 234 |

| MAHLE | BOSCH |
|---|---|
| KL223 | 0986 450 239 |
| KL225 | 0986 450 238 |
| KL237 | 0986 450 144 |
| KL238 | 0986 450 230 |
| KL239/1 | 0986 BF0 023 |
| KL316 | 0986 BF0 308 |
| KL41 | 0986 450 851 |
| KL420 | 0986 BF0 025 |
| KL425 | 0986 BF0 311 |
| KL430 | 0450 906 468 |
| KL446 | 0450 906 508 |
| KL559 | F026 403 009 |
| KL573 | 0450 905 969 |
| KL60 | 0986 450 240 |
| KL61 | 0450 905 324 |
| KL72 | 0450 902 161 |
| KL72 | 0986 BF0 024 |
| KL747 | 0986 BF0 405 |
| KL75 | 0986 BF0 400 |
| KL79 | 0986 450 236 |
| KL83 | 0986 BF0 018 |
| KL99 | 0986 BF0 306 |
| KX218D | 0986 BF0 231 |
| KX228D | 1457 070 013 |
| KX229 | F026 402 007 |
| KX23 | 0986 450 695 |
| KX35 | 0986 BF0 200 |
| KX36 | 0986 450 696 |
| KX43 | 0986 450 704 |
| KX44 | 0986 450 703 |
| KX49 | 0986 450 702 |
| KX67/2D | 0986 BF0 201 |
| KX69 | 1457 431 708 |
| KX78D | 1457 429 656 |
| KX79D | 0986 BF0 205 |
| KX84D | 0986 BF0 207 |
| KX85D | 0986 BF0 423 |
| KX87D | 0986 BF0 204 |
| KX89D | 0986 450 701 |

| MAHLE | BOSCH |
|---|---|
| LA 31 | 0986 BF0 506 |
| LA 33 | 0986 BF0 528 |
| LA 34 | 0986 BF0 526 |
| LA 49 | 0986 BF0 503 |
| LA 56 | 0986 BF0 505 |
| LA 57 | 0986 BF0 533 |
| LA 74 | 0986 BF0 525 |
| LA 75 | 0986 BF0 511 |
| LA 77 | 0986 BF0 513 |
| LA 78 | 0986 BF0 524 |
| LA 83 | 0986 BF0 516 |
| LA102 | 0986 BF0 523 |
| LA109 | 0986 BF0 556 |
| LA11 | 0986 BF0 501 |
| LA117 | 0986 BF0 545 |
| LA120 | 0986 BF0 512 |
| LA123 | 0986 BF0 510 |
| LA138 | 0986 BF0 546 |
| LA182 | 0986 BF0 575 |
| LA184 | 0986 BF0 576 |
| LA189 | 0986 BF0 714 |
| LA21 | 0986 BF0 514 |
| LA301 | 0986 BF0 562 |
| LA40 | 0986 BF0 565 |
| LA422 | 0986 BF0 515 |
| LA439 | 0986 BF0 564 |
| LA45 | 0986 BF0 574 |
| LA463 | 1987 432 415 |
| LA499 | 0986 BF0 539 |
| LA591 | 0986 BF0 540 |
| LA607 | 0986 BF0 554 |
| LA608 | 0986 BF0 559 |
| LA612 | 0986 BF0 717 |
| LA655 | 0986 BF0 558 |
| LA656 | 1987 431 167 |
| LA8 | 0986 BF0 522 |
| LA80 | 0986 BF0 507 |
| LA9 | 0986 BF0 509 |
| LAK 63 | 0986 BF0 711 |

| MAHLE | BOSCH |
|---|---|
| ● LAK 81 | 0986 BF0 704 |
| LX 1801 | 0986 B03 006 |
| LX1035 | F026 400 029 |
| LX1044 | 1457 433 090 |
| LX1045 | 1457 433 150 |
| LX1049 | 1457 433 955 |
| LX105/5 | 0986 B03 522 |
| LX105/6 | 0986 B03 537 |
| LX105/7 | 0986 B03 512 |
| LX106/6 | 0986 B02 301 |
| LX106/7 | 0986 B03 505 |
| ● LX106/8 | 0986 B03 501 |
| LX106/9 | 1457 432 284 |
| LX107/0 | 1457 432 288 |
| LX109/2 | 1457 432 280 |
| LX109/3 | 1457 432 289 |
| LX109/5 | 1987 429 602 |
| LX109/6 | 1987 429 605 |
| LX1211 | 1987 429 404 |
| LX1282 | 1457 433 076 |
| LX1287 | 1457 433 325 |
| LX131/2 | 0986 B02 322 |
| LX131/3 | 0986 B03 010 |
| LX131/4 | 0986 B03 001 |
| LX131/5 | 0986 B02 314 |
| LX131/6 | 1987 429 606 |
| LX1452 | 0986 B02 505 |
| LX157 | 0986 B02 002 |
| LX159/7 | 0986 B02 325 |
| LX1605 | 1457 433 583 |
| LX1655 | 0986 B03 575 |
| LX1673 | 0986 B03 004 |
| LX1712 | 0986 B02 323 |
| LX1713 | 1457 432 287 |
| LX1716 | 0986 B03 003 |
| LX1745 | 0986 B02 354 |
| LX1748 | 0986 B02 513 |
| LX1765 | 0986 B02 369 |
| LX1780/3 | 0986 B02 041 |

| MAHLE | BOSCH |
|---|---|
| LX1886 | 0986 B03 574 |
| LX1915 | 0986 B02 517 |
| LX1920 | F026 400 002 |
| LX200 | 0986 B03 534 |
| LX202 | 0986 B02 009 |
| LX208 | 0986 B02 018 |
| LX2093 | 0986 B02 377 |
| LX2124 | 0986 B03 566 |
| LX227 | 0986 B03 513 |
| LX236 | 0986 B03 511 |
| LX241 | 0986 B03 514 |
| LX2530 | 0986 AF2 180 |
| LX2531 | 0986 B03 007 |
| LX2643 | 0986 B03 573 |
| LX2644 | 0986 B03 570 |
| LX265 | 0986 B03 535 |
| LX271 | 0986 B03 515 |
| LX273 | 0986 B03 536 |
| LX2738 | 0986 B02 511 |
| LX275 | 0986 B03 526 |
| LX2882 | 0986 B02 507 |
| LX290 | 1987 429 603 |
| LX2995 | 0986 B02 509 |
| LX3115 | 0986 B02 510 |
| LX3234 | 0986 B02 504 |
| LX3304 | 0986 B02 512 |
| LX3354 | 0986 B02 373 |
| LX343 | 1457 433 004 |
| LX389 | 1457 433 007 |
| LX405 | 0986 B02 309 |
| LX418 | 0986 B02 311 |
| LX435 | 0986 B02 319 |
| LX448 | 0986 B02 316 |
| LX450 | 0986 B03 509 |
| LX453 | 0986 B02 303 |
| LX486 | 0986 B02 026 |
| LX513 | 1457 432 281 |
| LX519 | 0986 B02 021 |
| LX523 | 0986 B02 313 |

● Producto discontinuado

| MAHLE | BOSCH |
|---|---|
| LX524 | 0986 B02 334 |
| LX537 | 1457 433 747 |
| LX54 | 0986 B02 344 |
| LX55 | 0986 B02 005 |
| LX572 | 0986 B02 343 |
| LX614 | 0986 B02 318 |
| LX618 | 0986 B02 304 |
| LX643 | 0986 B02 312 |
| LX645/1 | F026 400 010 |
| LX682 | 0986 B03 551 |
| LX684 | 0986 B02 310 |
| LX687 | 0986 B02 320 |
| LX704/1 | 0986 B02 342 |
| LX708 | 0986 B02 332 |
| LX713 | F026 400 086 |
| LX735 | 1457 433 513 |
| LX773 | 0986 B02 333 |
| LX81 | 0986 B02 028 |
| LX906 | 0986 B02 307 |
| LX907 | 0986 B02 305 |
| LX908 | 0986 B02 306 |
| LX909 | 0986 B02 308 |
| LX910 | 0986 B03 531 |
| LX912 | 0986 B03 504 |
| LX957 | 1987 429 406 |
| LX958 | 0986 B02 017 |
| LX960 | 1457 432 286 |
| LX961 | 0986 B02 006 |
| LX962 | 0986 B02 321 |
| LX964 | 0986 B02 317 |
| LX971 | 0986 B03 520 |
| LX972 | 0986 B03 519 |
| LX977 | 0986 B02 324 |
| LX993 | 0986 B02 051 |
| LX998 | 0986 B02 371 |
| LX999 | 0986 B02 328 |
| ● LXS22/6 | 1987 429 608 |
| LXS23/0 | 1457 432 290 |
| LXS37/1 | 0986 B03 904 |

| MAHLE | BOSCH |
|---|---|
| LXS41/1 | 0986 B03 903 |
| LXS42/1 | 0986 B03 905 |
| LXS5/1 | 0986 B03 902 |
| OC 66 | 0986 B00 013 |
| OC100 | 0986 B00 002 |
| OC1055 | 0986 B00 055 |
| OC114 | 0986 B00 026 |
| OC121 | 0986 B01 018 |
| OC18 | 0986 B01 003 |
| OC195 | 0986 452 061 |
| OC2 | 0986 B00 010 |
| OC205 | 0986 452 354 |
| OC215 | 0986 452 058 |
| OC216 | 0986 452 350 |
| OC227 | 0986 B01 001 |
| OC23 | 0986 B00 014 |
| OC235 | 0451 103 321 |
| OC250 | 0986 B00 016 |
| OC259 | 0986 B00 015 |
| OC26 | 0986 B01 000 |
| OC261 | 0986 B01 026 |
| OC266 | 0986 B00 003 |
| OC274 | 0986 B00 011 |
| OC282 | 0986 B01 020 |
| OC300 | 0451 103 323 |
| OC302 | 0986 B01 023 |
| OC303 | 0986 B01 012 |
| OC304 | 0986 B01 011 |
| OC309 | 0451 103 332 |
| OC318 | 0986 B00 006 |
| OC320 | 0986 B01 008 |
| OC324 | 0986 B01 025 |
| OC332 | 0986 B00 020 |
| OC333 | 0986 B01 010 |
| OC35 | 0986 B01 015 |
| OC404 | 0986 B01 016 |
| OC466 | 0451 103 363 |
| OC47 | 0986 B00 018 |
| OC475 | 0986 B00 513 |

| MAHLE | BOSCH |
|---|---|
| OC522 | 0986 B00 004 |
| OC60 | 0986 B01 027 |
| OC606 | 0986 B00 512 |
| OC67 | 0451 103 325 |
| OC90 | 0986 B00 021 |
| OX1011D | 0986 B01 576 |
| OX126D | 1457 429 139 |
| OX143D | 0986 B00 707 |
| OX150/D | 0986 B01 555 |
| OX151D | 1457 429 275 |
| OX153D3 | 1457 437 001 |
| OX161/D | 0986 B01 557 |
| OX163/4D | 1457 429 199 |
| OX171/2D | 0986 B00 711 |
| OX174/D | 0986 B01 569 |
| OX175D | 0986 B00 702 |
| OX188D | 0986 B00 708 |
| OX193D | 1457 429 193 |
| OX197/D | 0986 B01 565 |
| ● OX198/D | 0986 B01 501 |
| OX201D | 1457 429 272 |
| OX210D | 0986 B00 710 |
| OX30D | 0986 B01 502 |
| OX339/2D | 0986 B00 705 |
| OX355/3D | F026 407 071 |
| OX368D1 | 1457 429 185 |
| OX379D | 0986 B00 709 |
| OX387D | 1457 429 269 |
| OX388D | 0986 B00 706 |
| ● OX388D | F026 407 023 |
| OX51 | 0986 B01 028 |
| OX69D | 0986 B01 561 |
| OX71D | 0986 B01 562 |
| OX75D | 0986 B01 554 |
| OX85D | 0986 B01 500 |
| OX95D | 0986 B01 556 |
| WFC1 | 0986 450 583 |
| WFC2 | 0986 450 582 |
| WFC3 | 0986 450 581 |

● Producto discontinuado

| MOTORCRAFT | BOSCH |
|---|---|
| 8671008149 | 0986 B00 013 |
| 5M5Q9176 AA | F026 402 007 |
| BF5T6731BA | 0986 B01 010 |
| BFA119 | 0986 B03 903 |
| BFA125 | 0986 B03 904 |
| BFA129 | 0986 B02 017 |
| BFL23 | 0986 B00 017 |
| BFL34 | 0986 B01 565 |
| BFL36 | 0451 103 323 |
| EFA 009 | 0986 B02 340 |
| EFA 022 | 1457 433 608 |
| EFA 075 | 0986 B02 002 |
| EFA 146 | 0986 B02 018 |
| EFA 160 | 1457 429 076 |
| EFA 180 | 1457 432 111 |
| EFA 287 | 1457 429 992 |
| EFA 296 | 1457 429 953 |
| EFA 297 | 0986 B03 534 |
| EFA 302 | 0986 B03 551 |
| EFA 304 | 0986 B03 526 |
| EFA 308 | 0986 B03 511 |
| EFA 311 | 0986 B03 535 |
| EFA 315 | 0986 B03 513 |
| EFA 318 | 0986 B03 514 |
| EFA 319 | 0986 B03 515 |
| EFA 323 | 0986 B03 509 |
| EFA 328 | 0986 B03 536 |
| EFA 396 | 1457 429 875 |
| EFA 486 | 1457 429 775 |
| EFA 495 | 1457 429 783 |
| EFA 496 | 1457 429 970 |
| EFA 497 | 1457 429 988 |
| ● EFA 500 | 1457 429 777 |
| EFA 522 | 1457 429 787 |
| EFA 543 | 1457 433 002 |
| EFA 553 | 1457 433 227 |
| EFA 568 | 0986 B02 311 |
| EFA 572 | 1457 433 623 |
| EFA 577 | 1457 433 711 |

| MOTORCRAFT | BOSCH |
|---|---|
| EFA 579 | 1457 433 742 |
| EFG 006 | 0450 905 324 |
| EFG 014 | 0450 905 216 |
| EFG 024 | 0986 450 694 |
| EFG 025 | 0986 450 519 |
| EFG 027 | 0986 450 696 |
| EFG 029 | 0986 450 704 |
| EFG 033 | 0986 450 730 |
| EFG 041 | 0450 905 203 |
| EFG 051 | 0986 450 240 |
| EFG 057 | 0986 450 732 |
| EFG 066 | 0986 450 703 |
| EFG 067 | 0986 450 702 |
| EFG 080 | 0986 450 731 |
| EFG 103 | 1457 434 123 |
| EFG 106 | 1457 434 103 |
| EFG 107 | 0450 905 095 |
| EFG 107 | 0986 450 234 |
| EFG 21 | 0450 904 058 |
| EFG 22 | 0450 905 021 |
| EFG 297 | 0986 450 851 |
| EFG 310 | 0450 905 177 |
| EFG 313 | 0450 905 901 |
| EFG 330 | 0450 906 357 |
| EFG 332 | 0986 450 721 |
| EFG005 | 0986 450 695 |
| EFL 048 | 0986 B00 018 |
| EFL 057 | 0451 103 351 |
| EFL 068 | 0986 B01 500 |
| EFL 087 | 0986 B01 652 |
| ● EFL 097 | 1457 429 610 |
| ● EFL 104 | 0986 B01 501 |
| EFL 106 | 0986 B00 003 |
| EFL 120 | 0986 B01 551 |
| EFL 137 | 0986 B01 031 |
| EFL 144 | 0451 103 271 |
| EFL 168 | 0986 452 028 |
| EFL 168 | 0986 452 350 |
| EFL 170 | 0986 B01 018 |

| MOTORCRAFT | BOSCH |
|---|---|
| EFL 173 | 0986 B01 015 |
| EFL 180 | 0986 B01 562 |
| EFL 181 | 0986 B01 554 |
| EFL 222 | 0986 B01 027 |
| EFL 223 | 0986 B01 003 |
| EFL 224 | 0986 B01 000 |
| EFL 257 | 0986 B00 021 |
| EFL 267 | 0986 B01 556 |
| EFL 269 | 0986 B01 502 |
| EFL 272 | 0986 B01 555 |
| EFL 273 | 0451 103 299 |
| EFL 273 | 0986 B00 002 |
| EFL 281 | 1457 429 606 |
| EFL 288 | 0986 B00 028 |
| EFL 314 | 0986 B00 015 |
| EFL 322 | 1457 429 274 |
| EFL 363 | 0451 103 105 |
| EFL 365 | 0986 B00 007 |
| EFL 371 | 0986 B00 014 |
| EFL 382 | 1457 429 760 |
| EFL 399 | 1457 429 142 |
| EFL 401 | 0451 103 290 |
| EFL 486 | 1457 429 638 |
| EFL 489 | 0451 103 332 |
| EFL 490 | 0451 103 240 |
| EFL 500 | 0451 103 321 |
| EFL 904 | 0986 452 062 |
| EFL264 | 0986 B01 561 |
| FA 1904 | 0986 B02 512 |
| FD3370 | 0986 450 707 |
| FG 986 B | 0450 905 939 |
| FL 816 | 0986 452 061 |
| FL 816 | 0986 B00 023 |
| FL1 | 0451 103 325 |
| R/FA/13 | 1987 429 605 |
| R/FA/40 | 0986 B03 406 |
| R/FP/1 | 0986 BF0 513 |
| RFA 5 | 0986 B02 307 |

● Producto discontinuado

| TECFIL | BOSCH |
|---|---|
| 02P202 | 0986 BF0 542 |
| ACA004 | 0986 BF0 714 |
| ACA104 | 0986 BF0 713 |
| ACA904 | 0986 BF0 717 |
| ACP001 | 0986 BF0 511 |
| ACP002 | 0986 BF0 503 |
| ACP003 | 0986 BF0 501 |
| ACP005 | 0986 BF0 545 |
| ACP100 | 0986 BF0 539 |
| ACP101 | 0986 BF0 541 |
| ACP102 | 0986 BF0 505 |
| ACP103 | 0986 BF0 515 |
| ACP122 | 0986 BF0 563 |
| ACP200 | 0986 BF0 513 |
| ACP298 | 0986 BF0 574 |
| ACP300 | 0986 BF0 506 |
| ACP481 | 0986 BF0 560 |
| ACP550 | 0986 BF0 550 |
| ACP551 | 0986 BF0 551 |
| ACP552 | 0986 BF0 565 |
| ACP707 | 0986 BF0 552 |
| ACP709 | 0986 BF0 554 |
| ACP727 | 0986 BF0 555 |
| ACP821 | 0986 BF0 564 |
| ACP885 | 0986 BF0 556 |
| ACP886 | 0986 BF0 557 |
| ACP971 | 0986 BF0 559 |
| ACP972 | 0986 BF0 562 |
| ACP973 | 0986 BF0 570 |
| ACP975 | 0986 BF0 561 |
| ACP976 | 0986 BF0 567 |
| ACP977 | 0986 BF0 566 |
| ACP979 | 0986 BF0 573 |
| AP1002 | 0986 B03 501 |
| AP1008 | 0986 B03 504 |
| AP1009 | 0986 B03 505 |
| AP1011 | 0986 B03 506 |
| AP1186 | 0986 B03 509 |
| AP2710 | 0986 B03 511 |

| TECFIL | BOSCH |
|---|---|
| AP2888 | 0986 B03 512 |
| AP4440 | 0986 B03 513 |
| AP4650 | 0986 B03 514 |
| AP4650/1 | 0986 B03 515 |
| AP5080 | 0986 B03 551 |
| AP5460 | 0986 B03 519 |
| AP5461 | 0986 B03 520 |
| AP5462 | 1987 429 605 |
| AP5571 | 0986 B03 522 |
| AP5572 | 0986 B03 523 |
| AP7108 | 0986 B03 526 |
| AP7992 | 0986 B03 544 |
| AP7998 | 0986 B03 531 |
| AP8528 | 0986 B03 534 |
| AP9834 | 0986 B03 535 |
| AP9835 | 0986 B03 536 |
| AP9836 | 0986 B03 537 |
| AR2147 | 0986 B02 002 |
| AR3147 | 0986 B02 005 |
| AR4148 | 0986 B02 006 |
| AR6089 | 0986 B02 009 |
| AR7702 | 1987 429 603 |
| AR8833 | 0986 B02 017 |
| AR9620 | 0986 B02 018 |
| ARL1116 | 0986 B02 301 |
| ARL2506 | 0986 B02 303 |
| ARL2507 | 0986 B02 304 |
| ARL4147 | 0986 B02 305 |
| ARL4150 | 0986 B02 306 |
| ARL4152 | 0986 B02 510 |
| ARL4415 | 0986 B02 356 |
| ARL5049 | 0986 B02 354 |
| ARL5050 | 0986 B02 312 |
| ARL5053 | 0986 B02 518 |
| ARL5140 | 0986 B02 506 |
| ARL6090 | 0986 B02 307 |
| ARL6091 | 0986 B02 308 |
| ARL6092 | 0986 B02 309 |
| ARL6093 | 0986 B02 310 |

| TECFIL | BOSCH |
|---|---|
| ARL6094 | 0986 B02 311 |
| ARL6095 | 0986 B02 324 |
| ARL6099 | 0986 B02 377 |
| ARL8109 | 0986 B02 369 |
| ARL8825 | 0986 B02 328 |
| ARL8828 | 0986 B02 507 |
| ARL8832 | 0986 B02 313 |
| ARL8834 | 0986 B02 314 |
| ARL8837 | 0986 B02 316 |
| ARL8838 | 0986 B02 317 |
| ARL8839 | 0986 B02 318 |
| ARL8840 | 1457 433 513 |
| ARL8841 | 1987 429 606 |
| ARL9601 | 0986 B02 319 |
| ARL9603 | 0986 B02 320 |
| ARL9604 | 0986 B02 321 |
| ARL9605 | 0986 B02 322 |
| ARL9606 | 1987 429 602 |
| ARL9607 | 0986 B02 323 |
| ARL9608 | 0986 B02 325 |
| ARS1013 | 1457 432 282 |
| ARS1189 | 1457 432 284 |
| ARS2711 | 1457 432 280 |
| ARS2868 | 1457 432 286 |
| ARS3003 | 0986 B03 001 |
| ARS5134 | 0986 B03 006 |
| ARS5196 | 0986 B02 041 |
| ARS5673 | 0986 B03 008 |
| ARS7109 | 0986 B03 002 |
| ARS7990 | 1457 432 287 |
| ARS7991 | 0986 B03 007 |
| ARS8842 | 0986 B03 004 |
| ARS9837 | 1457 432 288 |
| ARS9838 | 1457 432 289 |
| ARS9839 | 0986 B03 003 |
| ARS9840 | 0986 B03 010 |
| ART6097 | 0986 B02 332 |
| ART6098 | 0986 B02 371 |
| ART9613 | 0986 B02 512 |

| TECFIL | BOSCH |
|---|---|
| AS805 | 0986 B03 902 |
| AS810 | 0986 B03 903 |
| AS820 | 0986 B03 904 |
| AS830 | 0986 B03 905 |
| AS836 | 1987 429 608 |
| ASR203 | 0986 B03 408 |
| ASR806 | 0986 B03 400 |
| ASR807 | 0986 B03 402 |
| ASR815 | 1457 432 290 |
| ASR839 | 0986 B03 406 |
| FC1611 | 0986 450 704 |
| FC1641 | 0986 450 702 |
| FC1651 | 0986 450 703 |
| GI011 | 0986 450 234 |
| GI021 | 0986 450 238 |
| GI031 | 0986 450 240 |
| GI043 | 0986 BF0 018 |
| GI06/1 | 0986 BF0 026 |
| GI071 | 0986 450 239 |
| GI081 | 0986 450 144 |
| GI09 | 0450 905 916 |
| GI10 | 0986 450 236 |
| GI40/7 | 0986 BF0 023 |
| GI41 | 0986 450 230 |
| L41 | 0986 B01 500 |
| L750C | 0986 B01 501 |
| L90 | 0986 B01 502 |
| PC2155 | 0986 450 695 |
| PC811 | 0986 450 696 |
| PC944 | 0986 BF0 200 |
| PC946 | 0986 BF0 225 |
| PD204 | 0986 450 701 |
| PEC3021 | 1457 429 655 |
| PEC3022 | 0986 BF0 201 |
| PEL2002 | 0986 B01 569 |
| PEL2003 | 0986 B01 557 |
| PEL705* | 0986 B00 701 |
| PH346 | 0986 B01 652 |
| PL345 | 0986 B01 554 |

| TECFIL | BOSCH |
|---|---|
| PL364 | 0986 B01 555 |
| PL366 | 0986 B01 556 |
| PL447 | 0986 B01 561 |
| PL449 | 0986 B01 562 |
| PL519 | 0986 B01 565 |
| PSA299 | 0986 450 583 |
| PSA331 | 0986 450 582 |
| PSA761 | 0986 450 581 |
| PSC100 | 0986 450 717 |
| PSC404 | F026 402 034 |
| PSC410 | 0986 450 713 |
| PSC411 | 0986 450 728 |
| PSC451 | 0986 BF0 311 |
| PSC491 | 0986 450 723 |
| PSC495 | 0986 BF0 306 |
| PSC496 | 0986 450 732 |
| PSC498 | 0986 450 851 |
| PSC498/4 | 0986 BF0 405 |
| PSC4981 | 0986 BF0 400 |
| PSC4983 | 0986 BF0 308 |
| PSC499 | 0986 450 712 |
| PSC72/2 | 0986 450 519 |
| PSC73/1 | 0986 450 731 |
| PSC79 | 0986 450 725 |
| PSC84 | 0986 450 715 |
| PSC994 | 0986 450 722 |
| PSC998 | 0986 450 719 |
| PSC999 | 0986 450 721 |
| PSD420 | 0986 BF0 214 |
| PSD450 | 0986 BF0 219 |
| PSD4501 | 0986 450 710 |
| PSD460 | 0986 BF0 220 |
| PSD4601 | 0986 450 709 |
| PSD470 | 0986 BF0 222 |
| PSD4701 | 0986 450 734 |
| PSD480 | 0986 BF0 223 |
| PSD4801 | 0986 450 727 |
| PSD490 | 0986 BF0 221 |
| PSD4901 | 0986 450 708 |

● Producto discontinuado

| TECFIL | BOSCH |
|---|---|
| PSD530 | 0986 BF0 217 |
| PSD5301 | 0986 450 707 |
| PSD960 | 0986 BF0 224 |
| PSD9601 | 0986 450 726 |
| PSD964 | 0986 450 705 |
| PSD965 | 0986 450 706 |
| PSD9701 | 0986 450 729 |
| PSD9701 | 0986 BF0 218 |
| PSD9901 | 0986 BF0 461 |
| PSL123 | 0986 B01 000 |
| PSL134 | 0986 452 350 |
| PSL135 | 0986 B00 002 |
| PSL144 | 0986 B00 003 |
| PSL145 | 0451 103 321 |
| PSL146 | 0451 103 322 |
| PSL152 | 0986 B00 024 |
| PSL156 | 0986 B01 001 |
| PSL159 | F026 407 048 |
| PSL171 | 0986 B01 003 |
| PSL173 | 0986 B01 004 |
| PSL28 | 0986 B00 028 |
| PSL280 | 0986 B01 008 |
| PSL282 | 0986 B01 010 |
| PSL283 | 0986 B00 511 |
| PSL300 | 0986 B01 011 |
| PSL301 | 0986 B01 012 |
| PSL310 | 0986 B01 031 |
| PSL321 | 0986 B00 006 |
| PSL325 | 0986 B00 010 |
| PSL327 | 0986 B00 011 |
| PSL339 | 0986 B01 015 |
| PSL340 | 0986 B01 016 |
| PSL417 | 0986 B01 018 |
| PSL419 | 0986 B01 020 |
| PSL45 | 0986 B00 013 |
| PSL47 | 0986 B00 014 |
| PSL55 | 0986 B00 015 |
| PSL560 | 0986 B00 016 |
| PSL561 | 0986 B00 017 |

| TECFIL | BOSCH |
|---|---|
| PSL562 | 0986 B00 018 |
| PSL563 | 0986 B00 019 |
| PSL564 | 0986 B00 004 |
| PSL565 | 0451 103 323 |
| PSL569 | 0986 B01 023 |
| PSL617 | 0986 B00 020 |
| PSL619 | 0986 B00 021 |
| PSL675 | 0986 B01 028 |
| PSL714 | 0451 103 325 |
| PSL77 | 0451 103 332 |
| PSL78 | 0986 B00 023 |
| PSL818 | 0986 452 354 |
| PSL900 | 0986 B01 025 |
| PSL902 | 0986 B01 026 |
| PSL909 | 0986 B01 043 |
| PSL959 | 0986 B00 026 |
| PSL962 | 0986 B01 027 |

● Producto discontinuado

| WEGA | BOSCH |
|---|---|
| AKX 1130 | 1987 431 028 |
| AKX 1210 | 1987 432 069 |
| AKX 1372 | 0986 BF0 539 |
| AKX 35103 | 0986 BF0 520 |
| AKX 35110 | 0986 BF0 503 |
| AKX 35115 | 0986 BF0 522 |
| AKX 35125 | 0986 BF0 505 |
| AKX 35128 | 0986 BF0 524 |
| AKX 35132 | 0986 BF0 506 |
| AKX 35141 | 0986 BF0 526 |
| AKX 35147 | 0986 BF0 527 |
| AKX 35151 | 0986 BF0 528 |
| AKX 35157 | 0986 BF0 533 |
| AKX 35159 | 0986 BF0 545 |
| AKX 35164 | 0986 BF0 534 |
| AKX 35174 | 0986 BF0 513 |
| AKX 35262 | 0986 BF0 537 |
| AKX 35264 | 0986 BF0 511 |
| AKX 35279 | 0986 BF0 540 |
| AKX 35285 | 0986 BF0 525 |
| AKX 35321 | 0986 BF0 515 |
| AKX 3536 | 0986 BF0 501 |
| AKX 3546 | 0986 BF0 509 |
| AKX 3548 | 0986 BF0 510 |
| AKX 35608 | 0986 BF0 500 |
| AKX 3562 | 0986 BF0 514 |
| AKX 35634/C | 0986 BF0 711 |
| ● AKX 35667/C | 0986 BF0 704 |
| AKX 3569 | 0986 BF0 516 |
| AKX 3571 | 0986 BF0 517 |
| ● AKX 3597 | 0986 BF0 518 |
| AKX 3599 | 0986 BF0 519 |
| FAP 2823 | 0986 B02 030 |
| FAP 2827 | 0986 B02 313 |
| FAP 2830 | 1457 433 272 |
| FAP 2831 | 0986 B02 306 |
| FAP 2832 | 0986 B02 320 |
| FAP 2835 | 0986 B02 511 |
| FAP 2840 | 0986 B02 322 |

| WEGA | BOSCH |
|---|---|
| FAP 3202 | 1457 429 076 |
| FAP 3234 | 0986 B02 317 |
| FAP 3242 | 1457 433 623 |
| FAP 3243 | 1457 433 700 |
| FAP 3256 | 1457 433 697 |
| ● FAP 3259 | 1457 433 512 |
| FAP 3262 | 0986 B02 318 |
| FAP 3268 | 1457 433 513 |
| FAP 3278 | 0986 B02 342 |
| FAP 3280 | 0986 B02 328 |
| FAP 3287 | 0986 B02 324 |
| FAP 3289 | 0986 B02 314 |
| FAP 3601 | 1457 433 253 |
| FAP 3608 | 0986 B02 321 |
| FAP 3610 | 0986 B02 323 |
| FAP 3612 | 1457 433 751 |
| FAP 4013 | 1457 429 970 |
| FAP 4014 | 1457 429 783 |
| FAP 4033 | 0986 B02 305 |
| FAP 4034 | 0986 B02 307 |
| FAP 4037 | 0986 B02 339 |
| FAP 4045 | 0986 B02 310 |
| FAP 4049 | 0986 B02 308 |
| FAP 4813 | 0986 B03 519 |
| ● FAP 4816 | 1457 429 777 |
| FAP 4826 | 0986 B02 311 |
| FAP 4827 | 0986 B02 309 |
| FAP 4830 | 1457 433 004 |
| FAP 4831 | 0986 B02 319 |
| FAP 4832 | 0986 B02 334 |
| FAP 4837 | 1457 433 260 |
| FAP 4850 | 0986 B02 336 |
| FAP 4853 | 1457 433 699 |
| FAP 4863 | 0986 B02 053 |
| FAP 4863 | 1457 433 058 |
| FAP 4865 | 0986 B02 016 |
| FAP 4872 | 0986 B02 506 |
| FAP 4872/1 | 0986 B03 575 |
| FAP 5301 | 0986 B02 303 |

| WEGA | BOSCH |
|---|---|
| FAP 5303 | 0986 B02 304 |
| FAP 6003 | 1457 432 281 |
| FAP 6008 | 0986 B02 312 |
| FAP 7006 | 0986 B02 332 |
| FAP 7007 | 0986 B02 371 |
| FAP 9002 | 1987 429 602 |
| FAP 9003 | 0986 B02 325 |
| FAP 9027 | 0986 B02 505 |
| FAP 9119 | 1457 433 752 |
| FAP 9120 | 1457 433 716 |
| FAP 9286 | 0986 B02 512 |
| FAP 9469 | 0986 B02 335 |
| FCC 216 | 0986 BF0 008 |
| FCD 0602 | 1457 070 008 |
| FCD 0710 | 0986 BF0 200 |
| FCD 0720 | 0986 450 696 |
| FCD 0720/1 | 0986 450 703 |
| FCD 0721 | 0986 BF0 225 |
| FCD 0722 | 0986 BF0 204 |
| FCD 0724 | 0986 BF0 206 |
| FCD 0729 | 1457 431 704 |
| FCD 0730 | 0986 BF0 420 |
| FCD 0732 | 0986 450 701 |
| FCD 0742 | 1457 431 708 |
| FCD 0754 | 0986 BF0 208 |
| FCD 0766 | 0986 BF0 207 |
| FCD 0767 | 0986 BF0 209 |
| FCD 0768 | 0986 BF0 201 |
| FCD 0769 | 1457 429 655 |
| FCD 0771 | 1457 070 001 |
| FCD 0772 | 1457 431 723 |
| FCD 0796 | 0986 450 694 |
| FCD 0816/1 | 0986 BF0 210 |
| FCD 0816/2 | 0986 BF0 231 |
| FCD 0910 | 0450 906 468 |
| FCD 0915 | 0450 906 460 |
| FCD 0916 | 0450 906 471 |
| FCD 0936 | 1457 429 656 |
| FCD 2041 | 0986 450 713 |

| WEGA | BOSCH |
|---|---|
| FCD 2042 | 0986 BF0 237 |
| FCD 2043 | 0986 BF0 220 |
| FCD 2045B | 0986 450 519 |
| FCD 2046 | 0986 450 731 |
| ● FCD 2050 | 0986 BF0 302 |
| FCD 2051 | 0986 450 725 |
| FCD 2052 | 0986 450 726 |
| FCD 2058 | 0986 450 732 |
| FCD 2061 | 0986 BF0 311 |
| FCD 2062 | 0986 BF0 401 |
| FCD 2063 | 0450 906 357 |
| FCD 2063/2 | 0450 906 376 |
| FCD 2064 | 0986 BF0 308 |
| FCD 2065 | 0986 BF0 306 |
| FCD 2066 | 0986 450 851 |
| FCD 2066/1 | 0986 BF0 405 |
| FCD 2066/3 | 0986 BF0 355 |
| FCD 2067 | 0986 BF0 400 |
| FCD 2067/1 | 0450 906 322 |
| FCD 2068/1 | 0986 450 509 |
| ● FCD 2100 | 0450 906 431 |
| FCD 2110 | 1457 434 184 |
| FCD 2157 | 0986 450 712 |
| FCD 2158/1 | 0450 905 930 |
| FCD 2162 | 0986 450 730 |
| FCD 2170 | 0986 450 717 |
| FCD 2181 | 0986 BF0 309 |
| FCD 2183 | 0450 906 409 |
| FCD 2203 | 0986 450 727 |
| FCD 2203 | 0986 BF0 213 |
| FCD 2205 | 0986 450 715 |
| FCD 2206 | 0986 BF0 215 |
| FCD 2208 | 0986 450 718 |
| FCD 2209 | 0986 BF0 369 |
| FCD 2293 | 1457 434 293 |
| FCD 3010 | 0986 450 710 |
| FCD 3010 | 0986 BF0 219 |
| FCD 30124 | 0986 BF0 350 |
| FCD 3026 | 0986 450 707 |

| WEGA | BOSCH |
|---|---|
| FCD 3026 | 0986 BF0 217 |
| FCD 3028 | 0986 450 729 |
| FCD 3028 | 0986 BF0 218 |
| FCD 3060 | 0986 450 709 |
| FCD 3090 | 0986 450 734 |
| FCD 3090 | 0986 BF0 222 |
| FCD 3090/1 | 0986 BF0 223 |
| FCD 3090/2 | 0986 450 708 |
| FCD 3090/3 | 0986 BF0 221 |
| FCI 0363 | 0986 450 238 |
| FCI 1101A | 0986 450 240 |
| FCI 1103A | 0450 905 021 |
| FCI 1105A | 0450 905 201 |
| FCI 1105A | 0986 450 234 |
| FCI 1106A | 0450 905 203 |
| FCI 1107A | 0450 905 087 |
| FCI 1110B | 0450 905 177 |
| FCI 1111S | 0450 902 151 |
| FCI 1112 | 0450 905 275 |
| FCI 1163 | 0450 905 324 |
| FCI 1287 | 0450 905 264 |
| FCI 1288 | 0986 450 236 |
| FCI 1304 | 0450 905 959 |
| FCI 1600 | 0986 450 230 |
| FCI 1610 | 0986 BF0 023 |
| FCI 1620 | 0986 450 144 |
| FCI 1640 | 0986 450 239 |
| FCI 1660 | 0986 BF0 018 |
| ● FCI 1695 | 0986 BF0 011 |
| FCI 1695 | 0986 BF0 025 |
| FCI 1731 | 0450 905 901 |
| FCI 1732 | 0450 905 905 |
| FCI 1734 | 0450 905 952 |
| FCI 1866 | 0450 905 216 |
| FCI 1866/1 | 0450 905 908 |
| FCI 1881 | 0450 905 939 |
| FCI 1882 | F026 403 009 |
| FCI 1947 | 0450 915 001 |
| FCI 1948 | 0450 915 003 |

● Producto discontinuado

| WEGA | BOSCH |
|---|---|
| JFA 0108 | 1987 429 051 |
| JFA 0227/1 | 0986 B03 504 |
| JFA 0238 | 1987 429 135 |
| JFA 0249 | 1457 433 958 |
| JFA 0283 | F026 400 017 |
| JFA 0428/1 | 1987 429 191 |
| JFA 0428/2 | F026 400 054 |
| JFA 0491 | 1457 433 955 |
| JFA 0514 | 0986 B03 551 |
| JFA 0514/1 | 0986 B03 534 |
| JFA 0602 | 0986 B02 517 |
| JFA 0897 | 1457 433 956 |
| ● JFA 0982 | 1457 433 961 |
| JFA 0983 | 0986 B03 500 |
| JFA 0986 | 0986 B02 301 |
| JFA 0995 | 0986 B03 553 |
| JFA 0H12 | F026 400 044 |
| JFA 0K10 | 1987 429 180 |
| JFC 109 | 0986 BF0 234 |
| JFC 215 | 0986 450 721 |
| JFC 235 | 0986 450 115 |
| JFC 295 | 1457 434 440 |
| JFC 498 | 0450 905 916 |
| JFC 509 | 0986 450 722 |
| JFC 901 | 0986 450 719 |
| JFC H09 | F026 402 010 |
| JFC K05/1 | 1457 434 310 |
| JFO 0114 | 0986 452 046 |
| JFO 0197 | 0986 452 061 |
| JFO 0197 | 0986 B00 023 |
| JFO 0198 | 0986 B00 015 |
| JFO 0206 | 0451 103 325 |
| JFO 0210 | 0986 452 350 |
| JFO 0211 | 0451 103 322 |
| JFO 0213 | 0986 452 062 |
| JFO 0214 | 0451 103 276 |
| JFO 0297 | 0451 103 365 |
| JFO 0306 | 0986 B00 007 |
| JFO 0396 | 0986 B00 011 |

| WEGA | BOSCH |
|---|---|
| JFO 0501 | 0986 452 354 |
| JFO 0594 | F026 407 018 |
| JFO 0601 | 0986 B00 028 |
| JFO 0604 | 0986 452 058 |
| JFO 0895 | 0986 452 064 |
| JFO 0984 | 0986 B00 008 |
| JFO 0997 | 1457 429 274 |
| JFO 0K01/1 | 0986 B00 010 |
| WA 100 | 0986 450 582 |
| WA 200 | 0986 450 583 |
| WA 300 | 0986 450 581 |
| WAP 107-S | 0986 B03 905 |
| WAP 161 | 0986 B03 526 |
| WAP 185-S | 0986 B03 902 |
| WAP 186-S | 0986 B03 903 |
| WAP 187-S | 0986 B03 904 |
| WAP 200/4-S | 0986 B03 400 |
| WAP 285 | 0986 B03 531 |
| ● WAP 332-S | 1987 429 608 |
| WAP 365-S | 1457 432 290 |
| ● WAP 380 | 0986 B03 544 |
| WAP 382 | 1457 432 289 |
| WAP 383 | 1457 432 287 |
| WEO 0001 | 0986 B01 561 |
| WEO 0004 | 0986 B01 556 |
| WEO 0005 | 0986 B01 565 |
| WEO 0007 | 0986 B01 555 |
| WEO 0008 | 0986 B01 562 |
| WEO 0015 | 0986 B01 502 |
| WEO 0019 | 0986 B01 554 |
| WEO 509 | 1457 429 606 |
| ● WEO 511 | 1457 429 610 |
| WEO 512 | 0986 B01 652 |
| ● WEO 517/1 | 1457 429 121 |
| WEO 522 | 1457 429 638 |
| WEO 522/2 | 1457 429 275 |
| WEO 523 | 1457 429 760 |
| WEO 591/1 | 1457 429 616 |
| WEO 610 | 1457 429 278 |

| WEGA | BOSCH |
|---|---|
| WO 130 | 0986 B00 021 |
| WO 150 | 0451 103 321 |
| WO 152 | 0451 103 363 |
| WO 160 | 0986 B00 002 |
| WO 170 | 0986 B00 013 |
| WO 180 | 0986 B00 003 |
| WO 181 | 0986 B00 004 |
| WO 200 | 0451 103 332 |
| ● WO 205 | 0451 104 025 |
| WO 205 | 0986 B00 513 |
| WO 230 | 0986 B00 006 |
| WO 240 | 0451 103 323 |
| WO 260 | 0986 B01 035 |
| WO 261 | 0451 103 333 |
| WO 270 | 0986 B00 020 |
| WO 280 | 0986 B01 025 |
| WO 290 | 0986 B01 026 |
| WO 300 | 0986 B01 001 |
| WO 310 | 0986 B00 026 |
| WO 341 | 0986 B00 016 |
| WO 341 | 0986 B00 019 |
| WO 342 | F026 407 079 |
| WO 370 | 0986 B00 018 |
| WO 380 | 0986 B00 037 |
| WO 390 | 0451 103 271 |
| WO 390 | 0986 B00 017 |
| WO 411 | 0451 103 299 |
| WO 420 | 0986 B00 030 |
| WO 430 | 0986 B00 035 |
| WO 440 | 0986 B01 028 |
| WO 450 | 0986 B00 033 |
| WO 460 | 0986 B00 014 |
| WO 470 | 0986 B01 000 |
| WO 480 | 0986 B01 027 |
| WO 490 | 0451 103 240 |
| WO 540 | 0986 B01 016 |
| WO 550 | 0451 104 026 |
| WO 560 | 0451 103 311 |
| WO 590 | 0986 B01 038 |

| WEGA | BOSCH |
|---|---|
| WO 592 | F026 407 080 |
| WO 600 | F026 407 049 |
| WO 601 | 0986 B01 551 |
| WO 610 | 0986 B01 015 |
| WO 612 | 0986 B00 511 |
| WO 620 | 0986 B01 031 |
| WO 630 | 0986 B01 018 |
| WO 650 | 0986 B01 012 |
| WO 660 | 0986 B01 005 |
| WO 670 | 0986 B01 010 |
| WO 680 | 0986 B01 008 |
| WO 710 | 0986 B01 011 |
| WO 750 | 0986 B01 020 |
| WOE 100 | 1457 429 239 |
| WOE 120 | 1457 429 257 |
| WOE 210 | 1457 429 139 |
| WOE 212 | 1457 429 118 |
| WOE 213 | 1457 429 252 |
| WOE 220 | 1457 437 003 |
| WOE 221 | 1457 429 269 |
| WOE 230 | 1457 429 108 |
| WOE 240 | 1457 429 141 |
| WOE 300 | 1457 437 002 |
| WOE 300/1 | 1457 437 001 |
| WOE 300/3 | 1457 429 119 |
| WOE 301 | 1457 429 199 |
| WOE 308 | 1457 429 306 |
| WOE 313 | F026 407 006 |
| WOE 410 | 1457 429 147 |
| WOE 420 | 1457 429 128 |
| WOE 430 | 1457 429 122 |
| WOE 440 | 0986 B01 557 |
| WOE 450 | 0986 B01 569 |
| WOE 500 | 0986 B00 701 |
| ● WOE 510 | 0986 B00 710 |
| WOE 510 | 1457 429 198 |
| WOE 610 | 0986 B00 707 |
| ● WOE 610 | 1457 429 619 |
| WOE 611 | F026 407 002 |

| WEGA | BOSCH |
|---|---|
| WOE 620 | 1457 429 142 |
| WOE 630 | 0986 B00 708 |
| ● WOE 630 | 1457 429 192 |
| WOE 700 | 1457 429 193 |
| WOE 710 | 0986 B00 705 |
| WOE 710 | 0986 B00 711 |
| ● WOE 710 | 1457 429 238 |
| ● WOE 710 | 1457 429 249 |
| WOE 909 | 1457 429 256 |
| WR 100 | 0986 B02 020 |
| WR 106 | 0986 B02 006 |
| WR 107 | 1457 433 769 |
| WR 117 | 0986 B02 031 |
| WR 200/3 | 1457 432 286 |
| WR 200/4 | 0986 B03 002 |
| WR 200/5 | 0986 B03 004 |
| WR 200/6 | 0986 B03 402 |
| WR 201 | 0986 B02 018 |
| WR 213 | 0986 B02 002 |
| WR 223 | 1457 429 954 |
| WR 229 | 0986 B02 028 |
| WR 244 | 0986 B02 052 |
| ● WR 244 | 1457 433 311 |
| WR 251 | 0986 B02 502 |
| WR 256 | 0986 B02 005 |
| WR 257/1 | 0986 B02 021 |
| WR 257/3 | 1457 433 161 |
| WR 275 | 1987 429 603 |
| WR 281 | 0986 B02 019 |
| WR 308 | 0986 B02 025 |
| WR 311 | 1457 433 227 |
| WR 316 | 1457 432 282 |
| WR 327/1 | 1457 433 715 |
| WR 363 | F026 400 018 |
| WR 400 | 0986 B02 034 |
| WR 407 | 0986 B02 032 |
| WR 744/1 | 0986 B02 033 |
| WR 900 | 0986 B02 023 |

● Producto discontinuado

| WIX | BOSCH |
|---|---|
| 24071 | 0986 450 583 |
| 33020 | 0986 450 702 |
| 33033 | 0986 450 240 |
| 33111 | 0986 450 703 |
| 33112 | 0986 450 696 |
| 33128 | 0986 450 719 |
| 33138 | 0986 450 721 |
| 33161 | 0986 450 234 |
| 33166 | 0986 450 695 |
| 33167 | 0986 450 704 |
| 33199 | 0986 BF0 018 |
| 33209 | 0986 450 701 |
| 33231 | 0986 450 708 |
| 33242 | 0986 450 726 |
| 33257 | 0986 450 239 |
| 33353 | 0986 450 713 |
| 33421 | 0986 450 707 |
| 33472 | 0986 450 732 |
| 42001 | 0986 B02 005 |
| 42135 | 0986 B02 002 |
| 42200 | 1987 429 603 |
| 42222 | 0986 B03 551 |
| 42295 | 0986 B02 316 |
| 42445 | 0986 B02 009 |
| 42453 | 0986 B02 017 |
| 42544 | 0986 B03 531 |
| 42551 | 0986 B03 514 |
| 42564 | 0986 B03 512 |
| 42576 | 0986 B03 509 |
| 42608 | 0986 B03 515 |
| 42897 | 0986 B03 902 |
| 42898 | 0986 B03 905 |
| 42900 | 0986 B02 018 |
| 42902 | 0986 B03 903 |
| 46117 | 0986 B02 317 |
| 46144 | 1987 429 606 |
| 46327 | 0986 B02 309 |
| 46415 | 0986 B03 534 |
| 46430 | 0986 B03 526 |

| WIX | BOSCH |
|---|---|
| 46515 | 0986 B03 511 |
| 46525 | 0986 B03 904 |
| 46541 | 0986 B03 513 |
| 46554 | 0986 B03 535 |
| 46616 | 0986 B03 519 |
| 46634 | 0986 B02 314 |
| 46641 | 0986 B02 308 |
| 46644 | 0986 B02 313 |
| 46647 | 0986 B02 307 |
| 46648 | 0986 B02 305 |
| 46661 | 0986 B02 006 |
| 46694 | 0986 B03 520 |
| 46741 | 0986 B03 536 |
| 48035 | 0986 B03 522 |
| 48205 | 0986 B03 537 |
| 51003 | 0986 B00 021 |
| 51021 | 0986 B01 502 |
| 51061 | 0986 B00 026 |
| 51083 | 0986 B00 018 |
| 51085 | 0986 B00 014 |
| 51109 | 0986 B01 555 |
| 51142 | 0986 B01 556 |
| 51182 | 0986 B00 010 |
| 51187 | 1457 429 278 |
| 51307 | 0986 B01 001 |
| 51312 | 0451 103 323 |
| 51314 | 0986 B01 652 |
| 51345 | 0986 B01 554 |
| 51348 | 0451 103 321 |
| 51357 | 0986 B00 002 |
| 51365 | 0986 452 354 |
| 51602 | 0986 B01 010 |
| 51607 | 0986 B01 008 |
| 51727 | 0986 B01 565 |
| 51747 | 0986 B01 012 |
| 51748 | 0986 B01 011 |
| 51750 | 0986 B01 501 |
| 51768 | 0986 B01 000 |
| 51774 | 0986 B01 023 |

| WIX | BOSCH |
|---|---|
| 51791 | 0986 B01 018 |
| 51806 | 0986 B01 025 |
| 51820 | 0986 B01 027 |
| 51825 | 0986 B01 015 |
| 51841 | 0986 B00 013 |
| 36005BR | 0986 450 238 |
| 36095BR | 0986 450 709 |
| 48005BR | 0986 B02 303 |
| 48010BR | 0986 B02 306 |
| 48150BR | 0986 B02 318 |
| 48155BR | 0986 B02 301 |
| 48160BR | 0986 B02 321 |
| 48175BR | 0986 B02 319 |
| 48180BR | 0986 B03 501 |
| 48220BR | 0986 B02 304 |
| 48230BR | 0986 B02 311 |
| 48445BR | 0986 B02 322 |
| 48465BR | 0986 B02 310 |
| 51034/4 | 0986 B00 017 |
| 54005BR | 0986 B01 562 |
| 54010BR | 0986 B01 561 |
| 54025BR | 0986 B00 003 |
| 54045BR | 0986 B00 020 |
| 54050BR | 0986 B01 026 |
| 54140BR | 0986 B00 015 |
| 54155BR | 0986 B01 500 |
| LB1202 | 0986 B00 011 |

● Producto discontinuado

| PURFLUX | BOSCH |
|---|---|
| A 1045 | 1457 433 716 |
| A 1050 | 1457 433 747 |
| A 1052 | 1457 433 588 |
| A 1068 | 0986 B02 052 |
| ● A 1068 | 1457 433 311 |
| A 1083 | 1457 433 555 |
| A 1090 | 0986 B02 505 |
| A 1094 | 0986 B02 053 |
| A 1094 | 1457 433 058 |
| A 1097 | F026 400 010 |
| A 1102 | 1457 433 956 |
| A 1111 | 1457 433 090 |
| A 1112 | 1457 433 150 |
| A 1117 | 1457 433 152 |
| A 1119 | 1457 433 046 |
| A 1122 | 0986 B02 506 |
| A 1123 | 0986 B02 331 |
| ● A 1123 | 1457 433 078 |
| A 1140 | 1457 433 076 |
| A 1141 | 1457 433 158 |
| A 1160 | 1987 429 404 |
| A 201 | 1457 429 787 |
| A 2084 | 1987 429 406 |
| A 214 | 1457 433 004 |
| A 219 | 1457 433 623 |
| A 233 | 1457 433 735 |
| A 238 | 1457 433 608 |
| A 240 | 1457 433 752 |
| A 245 | 1457 433 007 |
| A 247 | 1457 433 260 |
| A 250 | 1457 433 263 |
| A 261 | 0986 B02 340 |
| A 263 | 1457 433 700 |
| A 267 | 1457 433 253 |
| A 281 | 1457 432 202 |
| A 292 | 1457 433 711 |
| A 309 | 1457 433 743 |
| A 310 | 1457 433 699 |
| A 322 | 1457 433 616 |

| PURFLUX | BOSCH |
|---|---|
| A 338 | 1457 433 270 |
| A 341 | 1457 433 002 |
| A 344 | 1457 433 742 |
| A 345 | 1457 433 769 |
| A 367 | 1457 433 272 |
| A 368 | 1457 433 697 |
| A 393 | 1457 433 715 |
| A 455 | 1457 432 111 |
| A 461 | 1457 429 076 |
| A 586 | 1457 429 953 |
| A 640 | 1457 429 992 |
| A 641 | 1457 429 875 |
| A 648 | 1457 429 783 |
| A 761 | 1457 429 970 |
| A 853 | 1457 429 839 |
| ● A 944 | 1457 429 777 |
| A 959 | 1457 429 775 |
| A 973 | 1457 433 227 |
| A1009 | 1457 433 154 |
| A1230 | 0986 B02 051 |
| AH 179 | 0986 BF0 546 |
| AH 193 | 0986 BF0 576 |
| C 447 | 1457 429 656 |
| C 483 | 1457 431 708 |
| C 485 | 1457 431 704 |
| CS 264 | 1457 434 293 |
| CS 404 A | 1457 434 103 |
| CS 435 A | 1457 434 123 |
| CS 436 | 1457 434 291 |
| CS 448 | 1457 434 187 |
| CS 451 | 1457 434 402 |
| CS 456 | 1457 434 184 |
| CS 484 | 0450 905 930 |
| CS 490 | 1457 434 314 |
| EP 100 | 0450 905 324 |
| EP 139 | 0450 902 151 |
| EP 145 | 0450 902 161 |
| EP 150 | 0450 905 901 |
| EP 151 | 0450 905 203 |

| PURFLUX | BOSCH |
|---|---|
| EP 152 | 0450 905 177 |
| EP 165 | 0450 905 905 |
| EP 189 | 0450 905 275 |
| EP 189 | 0450 915 003 |
| EP 191 | 0450 905 264 |
| EP 193 | 0450 905 216 |
| EP 57 | 0450 904 058 |
| EP 90 C | 0450 905 095 |
| EP 90 C | 0450 905 201 |
| EP 91 | 0450 905 021 |
| EP 91 | 0450 905 087 |
| FCS 412 BV | 0450 906 274 |
| FCS 472 | 0450 906 357 |
| FCS 704 | 0450 906 460 |
| FCS 710 | 0450 906 471 |
| FCS 711 | 0986 BF0 471 |
| FCS 748 | 0450 906 468 |
| FCS477 | 0450 906 508 |
| L 212 | 1457 429 638 |
| L 247 | 1457 429 122 |
| L 251 | 1457 429 278 |
| L 252 | 1457 429 616 |
| L 263 A | 0986 B00 708 |
| ● L 263 A | 1457 429 192 |
| L 272 | 1457 429 275 |
| L 291 | 0986 B00 707 |
| ● L 291 | 1457 429 619 |
| L 292 | 1457 437 003 |
| L 293 | 1457 429 141 |
| L 300 | 1457 429 147 |
| L 306 | 1457 437 002 |
| L 307 | 1457 429 119 |
| L 308 | 1457 429 108 |
| L 310 | 1457 429 193 |
| L 311 | 1457 437 001 |
| L 315 | 1457 429 139 |
| L 317 | 1457 429 152 |
| L 318 | 1457 429 244 |
| L 331 | 0986 B00 701 |

| PURFLUX | BOSCH |
|---|---|
| L 332 | 1457 429 199 |
| L 337 | 0986 B00 705 |
| ● L 337 | 1457 429 249 |
| L 343 | 0986 B00 711 |
| ● L 343 | 1457 429 238 |
| L 347 | 1457 429 185 |
| ● L 447 | 1457 429 610 |
| L 540 | 1457 429 606 |
| L 566 | 1457 429 274 |
| L 857 | 1457 429 760 |
| L493 | 0986 B01 502 |
| LS 105 | 0986 B00 018 |
| LS 130 | 0986 B01 003 |
| LS 188 B | 0451 103 271 |
| LS 194 | 0451 103 351 |
| LS 214 | 0451 103 290 |
| LS 236 | F026 407 049 |
| LS 245 | F026 407 005 |
| LS 254 | 0451 103 258 |
| LS 274 A | 0451 103 313 |
| LS 294 | 0451 103 311 |
| LS 296 | 0451 103 300 |
| LS 297 | 0451 103 354 |
| LS 322 | 0451 103 341 |
| LS 357 | 0451 103 363 |
| LS 414 | 0986 B01 027 |
| LS 427 | 0986 B01 000 |
| LS 489 A | 0986 452 061 |
| LS 547 | 0451 103 105 |
| LS 592 A | 0451 103 299 |
| LS 743 | 0986 452 028 |
| LS 760 | 0451 103 240 |
| LS 802 | 0451 104 026 |
| LS 867 B | 0986 B00 002 |
| LS 894 | 0986 452 064 |
| LS 895 | 0986 452 062 |
| ● LS 924 | 0451 104 025 |
| LS 924 | 0986 B00 513 |
| LS161 | 0986 B00 014 |

| PURFLUX | BOSCH |
|---|---|
| PS 9480 | 0450 906 322 |

● Producto discontinuado

| PUROLATOR | BOSCH |
|---|---|
| 37681 | 1457 429 139 |
| 00 610 | 0986 450 240 |
| A1003 | 0986 B02 314 |
| A1004 | 0986 B02 313 |
| A1005 | 0986 B02 305 |
| A1006 | 0986 B02 306 |
| A1007 | 0986 B02 307 |
| A1008 | 0986 B02 319 |
| A1010 | 0986 B02 009 |
| A1011 | 0986 B02 017 |
| A1012 | 0986 B02 320 |
| A1013 | 0986 B02 322 |
| A1014 | 0986 B02 018 |
| A1015 | 0986 B02 308 |
| A1017 | 0986 B02 321 |
| A1019 | 0986 B02 328 |
| A1020 | 1457 433 513 |
| A1023 | 0986 B02 325 |
| A1024 | 0986 B03 534 |
| A1025 | 0986 B03 526 |
| A1027 | 0986 B03 531 |
| A1031 | 0986 B03 520 |
| A1032 | 0986 B03 537 |
| A1035 | 0986 B03 509 |
| A1040 | 0986 B03 902 |
| A1068 | 0986 B02 052 |
| ● A1068 | 1457 433 311 |
| A1144 | 0986 B03 003 |
| A1145 | 0986 B03 001 |
| A14622 | 1987 429 404 |
| A17340 | 1457 433 623 |
| A24722 | 1457 433 958 |
| A24731 | 0986 B02 317 |
| A25156 | 1457 433 700 |
| A25210 | 1457 433 263 |
| A25219 | 1457 433 956 |
| A27001 | 1457 433 004 |
| A27002 | 1457 433 227 |
| A27003 | 0986 B02 311 |

| PUROLATOR | BOSCH |
|---|---|
| A27319 | 1457 433 608 |
| A27500 | 1457 429 783 |
| ● A27691 | 1457 429 777 |
| A27698 | 1457 433 699 |
| A27969 | 0986 B02 303 |
| A31142 | 0986 B02 005 |
| A34269 | 1457 429 953 |
| A34276 | 0986 B03 504 |
| A34320 | 1987 429 603 |
| A34995 | 0986 B02 309 |
| A35150 | 1457 433 955 |
| A35192 | 1987 429 602 |
| A35267 | 0986 B02 310 |
| A35406 | 1457 433 751 |
| A35470 | 1457 433 752 |
| A37010 | 1457 433 007 |
| A37055 | 1457 433 002 |
| A37859 | 1457 433 747 |
| A37874 | 1457 429 787 |
| ● A37881 | 1457 433 512 |
| A37962 | 1457 432 202 |
| A42030 | 0986 B03 551 |
| A44647 | 1457 429 839 |
| A44808 | 1457 432 288 |
| A45453 | 1457 433 537 |
| A45457 | 1457 433 046 |
| A47039 | 0986 B02 316 |
| A47378 | 1457 432 282 |
| A47701 | 1457 432 281 |
| A54793 | 1457 432 290 |
| A64699 | 1457 432 280 |
| A67710 | 0986 B03 009 |
| A67710 | 1457 433 270 |
| AF3100 | 0986 B03 903 |
| AF3101 | 0986 B03 904 |
| AF3102 | 0986 B03 905 |
| AF3141 | 1457 429 992 |
| AF3349 | 1457 429 875 |
| AF3492 | 0986 B01 023 |

| PUROLATOR | BOSCH |
|---|---|
| AF3498 | 0986 B03 515 |
| AF3501 | 1457 429 988 |
| AF3519 | 0986 B03 535 |
| AF4353 | 1457 429 970 |
| C14860 | 0986 BF0 537 |
| C15439 | 0986 BF0 536 |
| C15510 | 0986 BF0 523 |
| ● C18086 | 0986 BF0 704 |
| C18129 | 0986 BF0 526 |
| C18153 | 0986 BF0 517 |
| C25387 | 0986 BF0 524 |
| C25480 | 0986 BF0 503 |
| C25664 | 0986 BF0 507 |
| C27727 | 0986 BF0 505 |
| C27744 | 0986 BF0 509 |
| C27745 | 0986 BF0 531 |
| C27924 | 0986 BF0 513 |
| C28902 | 0986 BF0 501 |
| C28904 | 0986 BF0 520 |
| C28909 | 0986 BF0 504 |
| C28910 | 0986 BF0 514 |
| C37647 | 0986 BF0 522 |
| C38184 | 1987 432 364 |
| ● C38905 | 0986 BF0 518 |
| C38908 | 0986 BF0 500 |
| C45383 | 0986 BF0 506 |
| C45383 | 0986 BF0 711 |
| CS456 | 1457 434 184 |
| EP145 | 0450 902 161 |
| F1044 | 0986 450 238 |
| F1048 | 0986 450 230 |
| F1050 | 0986 BF0 018 |
| F1052 | 0986 450 144 |
| F1053 | 0986 450 239 |
| F1061 | 0986 450 695 |
| F44870 | 0450 905 916 |
| F50284 | 0986 450 519 |
| F50453 | 0986 BF0 200 |
| F53125 | 0986 450 696 |

| PUROLATOR | BOSCH |
|---|---|
| F53191 | 0450 905 087 |
| F53191 | 0450 905 906 |
| F54562 | 0986 450 707 |
| F54664 | 0986 450 115 |
| F55085 | 0450 905 216 |
| F57644 | 0986 BF0 306 |
| F60025 | 0986 BF0 461 |
| F60146 | 0450 905 201 |
| F60146 | 0450 905 264 |
| F60146 | 0450 905 275 |
| F60146 | 0986 450 234 |
| F60222 | 0986 450 719 |
| F62870 | 0450 906 508 |
| F63180 | 0986 450 721 |
| F65277 | 0450 905 939 |
| F65285 | 0986 450 236 |
| F65377 | 0450 905 908 |
| F65416 | 0450 915 003 |
| F65428 | 0986 BF0 471 |
| F67260 | 0450 905 177 |
| F67580 | 1457 434 402 |
| F67806 | 0986 450 851 |
| F77128 | 1457 434 187 |
| F77168 | 0450 905 203 |
| FCO213 | 0986 B00 017 |
| GF1401 | 0450 905 021 |
| GF68 | 0450 904 058 |
| H57150 | 1457 429 165 |
| L10109 | 0986 452 061 |
| L10193 | 0986 452 350 |
| L10193 | 0986 452 354 |
| L10193 | 0986 B00 006 |
| L10241 | 0451 103 271 |
| L10241 | 0451 103 322 |
| L10241 | 0986 452 028 |
| L10241 | 0986 452 062 |
| L10241 | 0986 B00 028 |
| L10241 | 0986 B01 001 |
| L10241 | F026 407 005 |

| PUROLATOR | BOSCH |
|---|---|
| L10343 | 0986 B00 007 |
| L1064 | 0986 B00 021 |
| L1065 | 0986 B00 003 |
| L1066 | 0986 B00 002 |
| L1067 | 0986 B00 015 |
| L1071 | 0986 B01 556 |
| L1072 | 0986 B01 555 |
| L1093 | 0986 B00 035 |
| L125 | 1457 437 003 |
| L14459 | 0986 B00 023 |
| L14459 | 0986 B00 024 |
| L14670 | 0986 B00 014 |
| L17270 | 0986 B00 019 |
| L17320 | 0451 103 311 |
| L17582 | 0986 B01 031 |
| L17695 | 0451 103 332 |
| L17819 | 0451 104 026 |
| L20195 | 0451 103 363 |
| L20252 | 0986 B00 004 |
| L20252 | 0986 B00 018 |
| L25195 | 0986 B01 026 |
| L25230 | 0451 103 258 |
| L25250 | 1457 429 142 |
| L25276 | 1457 437 001 |
| L25401 | 0451 103 313 |
| L27179 | 0451 103 321 |
| L27728 | 0451 103 354 |
| L29093 | 0986 B00 711 |
| ● L29093 | 1457 429 238 |
| L30001 | 0451 103 325 |
| L30257 | 0451 103 290 |
| L34750 | 0986 B00 011 |
| L34756 | 1457 429 616 |
| L35234 | 1457 429 244 |
| L35280 | 1457 429 141 |
| L35581 | 0986 B00 709 |
| ● L35581 | 1457 429 243 |
| L37616 | 1457 429 278 |
| L38018 | 0451 103 240 |

● Producto discontinuado

| PUROLATOR | BOSCH |
|---|---|
| L38113 | 0986 B00 708 |
| ● L38113 | 1457 429 192 |
| L44757 | 1457 429 122 |
| L45308 | 0986 B00 707 |
| ● L45308 | 1457 429 619 |
| L50250 | 0986 B01 020 |
| L57572 | F026 407 049 |
| LI3968 | 0986 B02 002 |
| LI4276 | 1457 432 111 |
| MFF 783 A | 0986 450 694 |
| PB3015D | 0986 B01 502 |
| PC202 | 0986 B01 000 |
| PC232 | 0986 B01 015 |
| PC253 | 0451 103 105 |
| PC33 | 0986 B01 027 |
| PC42 | 0986 450 731 |
| PER 308 F | 1457 434 123 |
| PER 322 F | 0986 450 730 |
| PER 323 F | 1457 434 103 |
| PER 4619 | 0451 103 299 |
| PER 4823 | 0986 B00 013 |
| PER137 | 0986 B01 025 |
| PER249F | 0986 450 732 |
| PER276 | 0451 103 351 |
| PER301 | 0451 103 323 |
| PER43 | 0986 450 713 |
| PER4422 | 0986 B01 008 |
| PER67 | 0986 B01 018 |
| PF3013D | 0986 450 702 |
| ● PFC30 | 0450 905 005 |
| ● PL11D | 1457 429 610 |
| PL13D1 | 1457 429 606 |
| PL31 | 0986 B01 565 |
| PL39D | 1457 429 274 |
| PL4810 | 1457 429 760 |
| PL4812 | 1457 429 638 |
| PM1149 | 1457 429 076 |
| PM1568 | 0986 B03 513 |
| PM1605 | 0986 B03 511 |

| PUROLATOR | BOSCH |
|---|---|
| PM1623 | 0986 B03 514 |
| PM1760 | 0986 B03 536 |
| PM2230D | 0986 B01 562 |
| PM2429 | 0986 B01 561 |
| PM2447 | 0986 B01 554 |
| PM3056D | 0986 B01 551 |
| PM390 | 0986 B01 500 |
| PM5122 | 0986 B01 652 |
| PW4453 | 0986 450 582 |
| PW4454 | 0986 450 583 |
| PW4456 | 0986 450 581 |
| PZ453 | 0986 450 704 |
| PZ454 | 0986 450 703 |
| ● T750 | 0986 B01 501 |
| TBO17 | 0986 B01 003 |
| TBO40 | 0986 B00 026 |

● Producto discontinuado

NUESTROS CENTROS

# DE DISTRIBUCION

**CATALOGO DIGITAL**

Ahora tambien, con solo un click ahora podes hacer todas ertus compras desde **catalogodigital**.iturria.com.ar

**CASA CENTRAL | MAR DEL PLATA**
Av. Colon 5757 (CP 7600) | Tel: (223) 410.4000
ccentral@iturria.com.ar

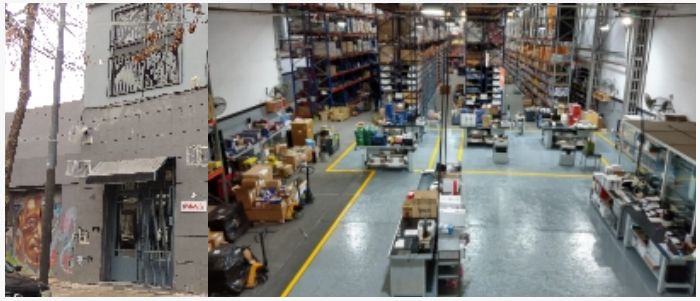

**SUCURSAL CAPITAL FEDERAL**
Andonaegui 1035 (C1427BEC) | Tel: (011) 3526.3020
sucursalcapital@iturria.com.ar

**SUCURSAL BAHIA BLANCA**
Av. Colon 1477 (B8000FUE) ¦ Tel: (0291) 455.0333
sucursalbahia@iturria.com.ar